BILL OF REINFORCING STEEL FOR SUPERSTRUCTURE - 100' BRIDGE

LOCATION	SHAPE	BAR	0° NO.	0° LENGTH	0° WEIGHT	15° NO.	15° LENGTH	15° WEIGHT	30° NO.	30° LENGTH	30° WEIGHT	45° NO.	45° LENGTH	45° WEIGHT
SLAB LONGITUDINAL BOTTOM		8a1	58	23'-4	3613	58	23'-4	3613	58	23'-4	3613	58	23'-4	3613
SLAB LONGITUDINAL BOTTOM		8a2	58	33'-6	5188	58	33'-6	5188	58	33'-6	5188	58	33'-6	5188
SLAB LONGITUDINAL BOTTOM		8a3	58	31'-6	4878	58	31'-6	4878	58	31'-6	4878	58	31'-6	4878
SLAB LONGITUDINAL BOTTOM		9a4	58	29'-10	5883	58	29'-10	5883	58	29'-10	5883	58	29'-10	5883
SLAB LONGITUDINAL BOTTOM		9a5	29	32'-0	3155	29	32'-0	3155	29	32'-0	3155	29	32'-0	3155
SLAB LONGITUDINAL BOTTOM, AT RAIL		8a6	8	36'-10	787	8	36'-10	787	8	36'-10	787	8	36'-10	787
SLAB LONGITUDINAL BOTTOM, AT RAIL		8a7	4	37'-4	399	4	37'-4	399	4	37'-4	399	4	37'-4	399
SLAB LONGITUDINAL BOTTOM, AT RAIL		8a8	8	26'-1	557	8	26'-1	557	8	26'-1	557	8	26'-1	557
SLAB LONGITUDINAL BOTTOM, AT RAIL		8a9	4	22'-6	240	4	22'-6	240	4	22'-6	240	4	22'-6	240
SLAB LONGITUDINAL TOP		6b1	58	5'-10	508	58	5'-10	508	58	5'-10	508	58	5'-10	508
SLAB LONGITUDINAL TOP		10b2	58	26'-9	6676	58	26'-9	6676	58	26'-9	6676	58	26'-9	6676
SLAB LONGITUDINAL TOP		10b3	58	27'-6	6863	58	27'-6	6863	58	27'-6	6863	58	27'-6	6863
SLAB LONGITUDINAL TOP		7b4	58	15'-4	1818	58	15'-4	1818	58	15'-4	1818	58	15'-4	1818
SLAB LONGITUDINAL TOP		6b5	58	12'-7	1096	58	12'-7	1096	58	12'-7	1096	58	12'-7	1096
SLAB LONGITUDINAL TOP		9b6	58	22'-9	4486	58	22'-9	4486	58	22'-9	4486	58	22'-9	4486
SLAB LONGITUDINAL TOP		6b7	29	26'-10	1169	29	26'-10	1169	29	26'-10	1169	29	26'-10	1169
SLAB LONGITUDINAL TOP, AT RAIL		6b8	8	24'-4	292	8	24'-4	292	8	24'-4	292	8	24'-4	292
SLAB LONGITUDINAL TOP, AT RAIL		9b9	8	23'-6	639	8	23'-6	639	8	23'-6	639	8	23'-6	639
SLAB LONGITUDINAL TOP, AT RAIL		6b10	4	21'-0	126	4	21'-0	126	4	21'-0	126	4	21'-0	126
SLAB LONGITUDINAL TOP, AT RAIL		6b11	8	26'-4	316	8	26'-4	316	8	26'-4	316	8	26'-4	316
SLAB LONGITUDINAL TOP, AT RAIL		10b12	8	19'-0	654	8	19'-0	654	8	19'-0	654	8	19'-0	654
SLAB TRANSVERSE BOTTOM		6c1	97	25'-5	3703	97	26'-4	3837	88	25'-5	3359	78	25'-5	2978
SLAB TRANSVERSE BOTTOM		6c2	97	23'-3	3387	97	24'-1	3509	89	23'-3	3108	80	23'-3	2794
SLAB TRANSVERSE ENDS, BOTTOM		6c3	-	-	-	-	-	-	12	VARIES	267	20	VARIES	459
SLAB TRANSVERSE ENDS, BOTTOM		6c4	-	-	-	-	-	-	11	VARIES	255	20	VARIES	434
SLAB TRANSVERSE ENDS, BOTTOM		6c5	-	-	-	-	-	-	11	VARIES	213	19	VARIES	350
SLAB TRANSVERSE ENDS, BOTTOM		6c6	-	-	-	-	-	-	11	VARIES	230	18	VARIES	386
SLAB TRANSVERSE TOP		5d1	97	25'-9	2605	97	26'-8	2698	88	25'-9	2363	78	25'-9	2095
SLAB TRANSVERSE TOP		5d2	97	23'-3	2352	97	24'-1	2437	89	23'-3	2158	80	23'-3	1940
SLAB TRANSVERSE ENDS, TOP		5d3	-	-	-	-	-	-	12	VARIES	186	20	VARIES	319
SLAB TRANSVERSE ENDS, TOP		5d4	-	-	-	-	-	-	11	VARIES	177	20	VARIES	301
SLAB TRANSVERSE ENDS, TOP		5d5	-	-	-	-	-	-	11	VARIES	148	19	VARIES	243
SLAB TRANSVERSE ENDS, TOP		5d6	-	-	-	-	-	-	11	VARIES	160	18	VARIES	268
SLAB, TRANSVERSE AT ABUTMENT		8e1	20	28'-4	1513	20	29'-2	1558	20	31'-9	1695	20	37'-6	2003
SLAB, TRANSVERSE AT ABUTMENT		8e2	20	23'-4	1246	20	24'-1	1286	20	26'-9	1428	20	32'-5	1731
SLAB, HAIRPINS, AT ABUTMENT		6e3	100	6'-10	1026	100	6'-11	1039	100	7'-3	1089	100	7'-11	1189
PIER CAP HOOPS		5h1	66	7'-5	511	66	7'-5	511	88	7'-5	681	110	7'-5	851
PIER CAP ENDS		8h2	4	14'-5	154	4	14'-5	154	4	14'-5	154	4	14'-5	154
PIER CAP, BOTTOM LONGITUDINAL		8h3	8	27'-5	586	8	28'-8	612	8	31'-8	676	8	37'-10	808
PIER CAP, BOTTOM LONGITUDINAL		8h4	8	21'-11	468	8	22'-4	477	8	24'-6	523	8	29'-8	634
PIER CAP, TOP LONGITUDINAL		8h5	4	28'-2	301	4	29'-6	315	4	32'-8	349	4	38'-11	416
PIER CAP, TOP LONGITUDINAL		8h6	4	23'-5	250	4	23'-11	255	4	26'-3	280	4	31'-6	336
TOP OF SLAB, TRANSVERSE, AT RAIL		5j1	192	8'-6	1702	192	8'-6	1702	186	8'-6	1649	184	8'-6	1631
WING, VERTICAL		5m1-4	32	SHOWN	117	32	SHOWN	117	32	SHOWN	117	32	SHOWN	117
WING, HORIZONTAL		5n1	24	6'-8	167	24	6'-8	167	24	6'-8	167	24	6'-8	167
PAVING SUPPORT, TRANSVERSE		5p1	44	8'-10	405	46	8'-10	424	50	8'-10	461	62	8'-10	571
PAVING SUPPORT LONGITUDINAL		5p3	6	24'-9	155	6	26'-1	163	6	28'-9	180	6	34'-7	216
PAVING SUPPORT LONGITUDINAL		5p4	6	22'-0	138	6	22'-10	143	6	25'-5	159	6	31'-1	195
SUB TOTAL - LBS.					70,129			70,747			71,575			72,929
BARRIER RAIL - SEE LIST ON RAIL SHEET J44-46-06					6153			6153			6153			6153
OPEN RAIL - SEE LIST ON RAIL SHEET J44-49-06					6371			6371			6371			6371
TOTAL - LBS. WITH MONOLITHIC PIER CAP		WITH BARRIER RAIL			76,282			76,900			77,728			79,082
		WITH OPEN RAIL			76,500			77,118			77,946			79,300
TOTAL - LBS. WITH NON-MONOLITHIC PIER CAP		WITH BARRIER RAIL			74,012			74,576			75,065			75,883
SAME AS ABOVE EXCEPT ALL "h" BARS DELETED		WITH OPEN RAIL			74,230			74,794			75,283			76,101

ESTIMATED QUANTITIES FOR SUPERSTRUCTURE - 100' BRIDGE

ITEM		SKEW	WITH MONOLITHIC PIER CAP 0°	15°	30°	45°	WITH NON-MONOLITHIC PIER CAP 0°	15°	30°	45°
WITH BARRIER RAIL	*STRUCTURAL CONCRETE (BRIDGE)	C.Y.	301.0	302.5	307.6	318.6	294.6	295.9	300.2	309.7
	REINFORCING STEEL EPOXY COATED	LBS.	76,282	76,900	77,728	79,082	74,012	74,576	75,065	75,883
	CONCRETE BARRIER OR OPEN RAIL	LIN. FT.	222.0	222.2	222.9	224.5	222.0	222.2	222.9	224.5
WITH OPEN RAIL	*STRUCTURAL CONCRETE (BRIDGE)	C.Y.	300.8	302.3	307.4	318.4	294.4	295.7	300.0	309.5
	REINFORCING STEEL EPOXY COATED	LBS.	76,500	77,118	77,946	79,300	74,230	74,794	75,283	76,101

* INCLUDES 4 WINGS @ 0.71 C.Y. EACH; EXCLUDES RAIL CONCRETE.

BENT BAR DETAILS

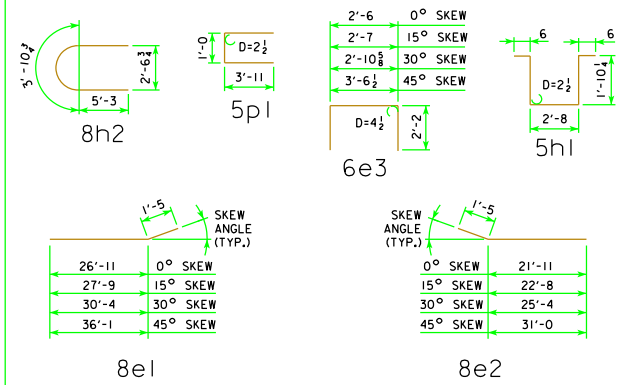

NOTE: ALL DIMENSIONS ARE OUT TO OUT. D = PIN DIAMETER.

NOTES:

ALL REINFORCING STEEL SHALL BE EPOXY COATED.

THE TRANSVERSE REBARS ARE DETAILED WITH A SPLICE LAP. AT THE CONTRACTOR'S OPTION, THIS LAP MAY BE ELIMINATED BY FURNISHING FULL LENGTH BARS WITH NO REDUCTION IN PAY WEIGHT FOR SAME.

REVISED 12-07 - OPEN RAIL REINFORCING QUANTITY CHANGED

12-07
LATEST REVISION DATE

APPROVED BY BRIDGE ENGINEER

Iowa Department of Transportation
Highway Division

STANDARD DESIGN - 44' ROADWAY, 3 SPAN BRIDGES

CONTINUOUS CONCRETE SLAB BRIDGES

NOVEMBER, 2006

SUPERSTRUCTURE DETAILS
100'-0 BRIDGE

J44-09-06