BILL OF REINFORCING STEEL FOR SUPERSTRUCTURE - 110' BRIDGE

LOCATION / SKEW	SHAPE	BAR	0° NO.	0° LENGTH	0° WEIGHT	15° NO.	15° LENGTH	15° WEIGHT	30° NO.	30° LENGTH	30° WEIGHT	45° NO.	45° LENGTH	45° WEIGHT
SLAB LONGITUDINAL BOTTOM		8a1	58	25'-4	3923	58	25'-4	3923	58	25'-4	3923	58	25'-4	3923
SLAB LONGITUDINAL BOTTOM		9a2	58	38'-3	7543	58	38'-3	7543	58	38'-3	7543	58	38'-3	7543
SLAB LONGITUDINAL BOTTOM		8a3	58	34'-3	5304	58	34'-3	5304	58	34'-3	5304	58	34'-3	5304
SLAB LONGITUDINAL BOTTOM		9a4	58	32'-10	6475	58	32'-10	6475	58	32'-10	6475	58	32'-10	6475
SLAB LONGITUDINAL BOTTOM		8a5	29	41'-0	3175	29	41'-0	3175	29	41'-0	3175	29	41'-0	3175
SLAB LONGITUDINAL BOTTOM, AT RAIL		9a6	8	40'-4	1097	8	40'-4	1097	8	40'-4	1097	8	40'-4	1097
SLAB LONGITUDINAL BOTTOM, AT RAIL		9a7	4	42'-8	580	4	42'-8	580	4	42'-8	580	4	42'-8	580
SLAB LONGITUDINAL BOTTOM, AT RAIL		8a8	8	24'-10	530	8	24'-10	530	8	24'-10	530	8	24'-10	530
SLAB LONGITUDINAL BOTTOM, AT RAIL		8a9	4	24'-0	256	4	24'-0	256	4	24'-0	256	4	24'-0	256
SLAB LONGITUDINAL TOP		8b1	58	11'-10	1833	58	11'-10	1833	58	11'-10	1833	58	11'-10	1833
SLAB LONGITUDINAL TOP		10b2	58	28'-4	7071	58	28'-4	7071	58	28'-4	7071	58	28'-4	7071
SLAB LONGITUDINAL TOP		10b3	58	25'-7	6385	58	25'-7	6385	58	25'-7	6385	58	25'-7	6385
SLAB LONGITUDINAL TOP		7b4	58	20'-3	2401	58	20'-3	2401	58	20'-3	2401	58	20'-3	2401
SLAB LONGITUDINAL TOP		10b5	58	26'-6	6614	58	26'-6	6614	58	26'-6	6614	58	26'-6	6614
SLAB LONGITUDINAL TOP		6b6	29	27'-4	1191	29	27'-4	1191	29	27'-4	1191	29	27'-4	1191
SLAB LONGITUDINAL TOP, AT RAIL		6b8	8	25'-7	307	8	25'-7	307	8	25'-7	307	8	25'-7	307
SLAB LONGITUDINAL TOP, AT RAIL		10b9	8	27'-3	938	8	27'-3	938	8	27'-3	938	8	27'-3	938
SLAB LONGITUDINAL TOP, AT RAIL		6b10	4	21'-0	126	4	21'-0	126	4	21'-0	126	4	21'-0	126
SLAB LONGITUDINAL TOP, AT RAIL		6b11	8	29'-1	349	8	29'-1	349	8	29'-1	349	8	29'-1	349
SLAB LONGITUDINAL TOP, AT RAIL		10b12	8	19'-6	671	8	19'-6	671	8	19'-6	671	8	19'-6	671
SLAB TRANSVERSE BOTTOM		6c1	107	25'-5	4085	107	26'-4	4232	98	25'-5	3741	88	25'-5	3359
SLAB TRANSVERSE BOTTOM		6c2	107	23'-3	3737	107	24'-1	3871	99	23'-3	3457	90	23'-3	3143
SLAB TRANSVERSE ENDS, BOTTOM		6c3	-	-	-	-	-	-	12	VARIES	267	20	VARIES	459
SLAB TRANSVERSE ENDS, BOTTOM		6c4	-	-	-	-	-	-	11	VARIES	255	20	VARIES	434
SLAB TRANSVERSE ENDS, BOTTOM		6c5	-	-	-	-	-	-	11	VARIES	213	19	VARIES	350
SLAB TRANSVERSE ENDS, BOTTOM		6c6	-	-	-	-	-	-	11	VARIES	230	18	VARIES	386
SLAB TRANSVERSE TOP		5d1	107	25'-9	2874	107	26'-8	2976	98	25'-9	2632	88	25'-9	2363
SLAB TRANSVERSE TOP		5d2	107	23'-3	2595	107	24'-1	2688	99	23'-3	2401	90	23'-3	2182
SLAB TRANSVERSE ENDS, TOP		5d3	-	-	-	-	-	-	12	VARIES	186	20	VARIES	319
SLAB TRANSVERSE ENDS, TOP		5d4	-	-	-	-	-	-	11	VARIES	177	20	VARIES	301
SLAB TRANSVERSE ENDS, TOP		5d5	-	-	-	-	-	-	11	VARIES	148	19	VARIES	243
SLAB TRANSVERSE ENDS, TOP		5d6	-	-	-	-	-	-	11	VARIES	160	18	VARIES	268
SLAB, TRANSVERSE AT ABUTMENT		8e1	20	28'-4	1513	20	29'-2	1558	20	31'-9	1695	20	37'-6	2003
SLAB, TRANSVERSE AT ABUTMENT		8e2	20	23'-4	1246	20	24'-1	1286	20	26'-9	1428	20	32'-5	1731
SLAB, HAIRPINS, AT ABUTMENT		6e3	100	6'-10	1026	100	6'-11	1039	100	7'-3	1089	100	7'-11	1189
PIER CAP HOOPS		5h1	72	7'-7	569	72	7'-7	569	96	7'-7	759	96	7'-7	759
PIER CAP ENDS		8h2	4	14'-5	154	4	14'-5	154	4	14'-5	154	4	14'-5	154
PIER CAP, BOTTOM LONGITUDINAL		8h3	8	27'-5	586	8	28'-8	612	8	31'-8	676	8	37'-10	808
PIER CAP, BOTTOM LONGITUDINAL		8h4	8	21'-11	468	8	22'-4	477	8	24'-6	523	8	29'-8	634
PIER CAP, TOP LONGITUDINAL		8h5	4	28'-2	301	4	29'-6	315	4	32'-8	349	4	38'-11	416
PIER CAP, TOP LONGITUDINAL		8h6	4	23'-5	250	4	23'-11	255	4	26'-3	280	4	31'-6	336
TOP OF SLAB, TRANSVERSE, AT RAIL		5j1	212	8'-6	1879	212	8'-6	1879	206	8'-6	1826	204	8'-6	1809
WING, VERTICAL		5m1-4	32	SHOWN	117	32	SHOWN	117	32	SHOWN	117	32	SHOWN	117
WING, HORIZONTAL		5n1	24	6'-8	167	24	6'-8	167	24	6'-8	167	24	6'-8	167
PAVING SUPPORT, TRANSVERSE		5p1	44	8'-10	405	46	8'-10	424	50	8'-10	461	62	8'-10	571
PAVING SUPPORT LONGITUDINAL		5p3	6	24'-9	155	6	26'-1	163	6	28'-9	180	6	34'-7	216
PAVING SUPPORT LONGITUDINAL		5p4	6	22'-0	138	6	22'-10	143	6	25'-5	159	6	31'-1	195
SUB TOTAL - LBS.					79,034			79,694			80,499			81,681
BARRIER RAIL - SEE LIST ON RAIL SHEET J44-46-06					6654			6654			6654			6654
OPEN RAIL - SEE LIST ON RAIL SHEET J44-49-06					6838			6838			6838			6838
TOTAL - LBS. WITH MONOLITHIC PIER CAP		WITH BARRIER RAIL			85,688			86,348			87,153			88,335
		WITH OPEN RAIL			85,872			86,532			87,337			88,519
TOTAL - LBS. WITH NON-MONOLITHIC PIER CAP		WITH BARRIER RAIL			83,360			83,966			84,412			85,228
SAME AS ABOVE EXCEPT ALL "h" BARS DELETED		WITH OPEN RAIL			83,544			84,150			84,596			85,412

ESTIMATED QUANTITIES FOR SUPERSTRUCTURE - 110' BRIDGE

ITEM		SKEW	WITH MONOLITHIC PIER CAP 0°	15°	30°	45°	WITH NON-MONOLITHIC PIER CAP 0°	15°	30°	45°
WITH BARRIER RAIL	*STRUCTURAL CONCRETE (BRIDGE)	C.Y.	342.0	343.5	348.6	359.5	335.7	336.9	341.2	350.6
	REINFORCING STEEL EPOXY COATED	LBS.	85,688	86,348	87,153	88,335	83,360	83,966	84,412	85,228
	CONCRETE BARRIER OR OPEN RAIL	LIN. FT.	242.0	242.2	242.9	244.5	242.0	242.2	242.9	244.5
WITH OPEN RAIL	*STRUCTURAL CONCRETE (BRIDGE)	C.Y.	341.8	343.3	348.4	359.3	335.4	336.7	341.0	350.4
	REINFORCING STEEL EPOXY COATED	LBS.	85,872	86,532	87,337	88,519	83,544	84,150	84,596	85,412

* INCLUDES 4 WINGS @ 0.71 C.Y. EACH; EXCLUDES RAIL CONCRETE.

BENT BAR DETAILS

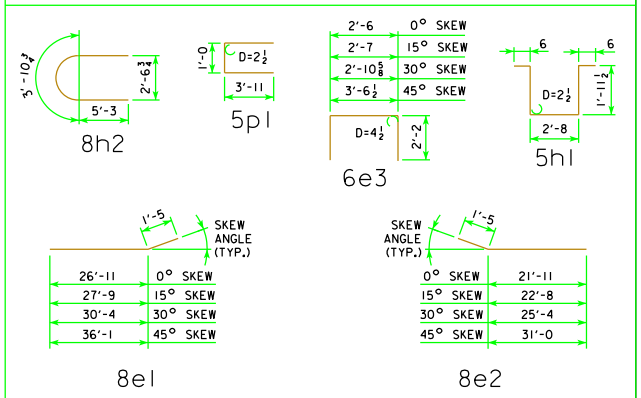

NOTE: ALL DIMENSIONS ARE OUT TO OUT. D = PIN DIAMETER.

NOTES:

ALL REINFORCING STEEL SHALL BE EPOXY COATED.

THE TRANSVERSE REBARS ARE DETAILED WITH A SPLICE LAP. AT THE CONTRACTOR'S OPTION, THIS LAP MAY BE ELIMINATED BY FURNISHING FULL LENGTH BARS WITH NO REDUCTION IN PAY WEIGHT FOR SAME.

REVISED 12-07 - OPEN RAIL REINFORCING QUANTITY CHANGED

12-07
LATEST REVISION DATE

APPROVED BY BRIDGE ENGINEER

Iowa Department of Transportation
Highway Division

STANDARD DESIGN - 44' ROADWAY, 3 SPAN BRIDGES

CONTINUOUS CONCRETE SLAB BRIDGES

NOVEMBER, 2006

SUPERSTRUCTURE DETAILS
110'-0 BRIDGE

J44-11-06