BILL OF REINFORCING STEEL FOR SUPERSTRUCTURE - 90' BRIDGE

LOCATION	SHAPE	BAR	0° NO.	0° LENGTH	0° WEIGHT	15° NO.	15° LENGTH	15° WEIGHT	30° NO.	30° LENGTH	30° WEIGHT	45° NO.	45° LENGTH	45° WEIGHT
SLAB LONGITUDINAL BOTTOM		8a1	53	21'-1	2984	53	21'-1	2984	53	21'-1	2984	53	21'-1	2984
SLAB LONGITUDINAL BOTTOM		8a2	53	30'-3	4281	53	30'-3	4281	53	30'-3	4281	53	30'-3	4281
SLAB LONGITUDINAL BOTTOM		8a3	53	28'-6	4033	53	28'-6	4033	53	28'-6	4033	53	28'-6	4033
SLAB LONGITUDINAL BOTTOM		8a4	52	26'-7	3691	52	26'-7	3691	52	26'-7	3691	52	26'-7	3691
SLAB LONGITUDINAL BOTTOM		8a5	26	28'-0	1944	26	28'-0	1944	26	28'-0	1944	26	28'-0	1944
SLAB LONGITUDINAL BOTTOM, AT RAIL		8a6	8	33'-4	712	8	33'-4	712	8	33'-4	712	8	33'-4	712
SLAB LONGITUDINAL BOTTOM, AT RAIL		8a7	4	34'-4	367	4	34'-4	367	4	34'-4	367	4	34'-4	367
SLAB LONGITUDINAL BOTTOM, AT RAIL		8a8	8	23'-10	509	8	23'-10	509	8	23'-10	509	8	23'-10	509
SLAB LONGITUDINAL BOTTOM, AT RAIL		8a9	4	21'-0	224	4	21'-0	224	4	21'-0	224	4	21'-0	224
SLAB LONGITUDINAL TOP		6b1	53	6'-10	544	53	6'-10	544	53	6'-10	544	53	6'-10	544
SLAB LONGITUDINAL TOP		9b2	53	22'-9	4100	53	22'-9	4100	53	22'-9	4100	53	22'-9	4100
SLAB LONGITUDINAL TOP		9b3	53	33'-10	6097	53	33'-10	6097	53	33'-10	6097	53	33'-10	6097
SLAB LONGITUDINAL TOP		6b4	52	11'-10	924	52	11'-10	924	52	11'-10	924	52	11'-10	924
SLAB LONGITUDINAL TOP		9b5	52	27'-6	4862	52	27'-6	4862	52	27'-6	4862	52	27'-6	4862
SLAB LONGITUDINAL TOP		6b6	26	16'-10	657	26	16'-10	657	26	16'-10	657	26	16'-10	657
SLAB LONGITUDINAL TOP, AT RAIL		6b8	8	24'-10	298	8	24'-10	298	8	24'-10	298	8	24'-10	298
SLAB LONGITUDINAL TOP, AT RAIL		9b9	8	19'-6	530	8	19'-6	530	8	19'-6	530	8	19'-6	530
SLAB LONGITUDINAL TOP, AT RAIL		6b10	4	18'-0	108	4	18'-0	108	4	18'-0	108	4	18'-0	108
SLAB LONGITUDINAL TOP, AT RAIL		6b11	8	27'-4	328	8	27'-4	328	8	27'-4	328	8	27'-4	328
SLAB LONGITUDINAL TOP, AT RAIL		10b12	8	13'-3	456	8	13'-3	456	8	13'-3	456	8	13'-3	456
SLAB TRANSVERSE BOTTOM		6c1	87	23'-5	3060	87	24'-3	3169	80	23'-5	2814	72	23'-5	2532
SLAB TRANSVERSE BOTTOM		6c2	87	21'-3	2777	87	22'-0	2875	81	21'-3	2585	74	21'-3	2362
SLAB TRANSVERSE ENDS, BOTTOM		6c3	-	-	-	-	-	-	11	VARIES	226	18	VARIES	386
SLAB TRANSVERSE ENDS, BOTTOM		6c4	-	-	-	-	-	-	10	VARIES	219	18	VARIES	363
SLAB TRANSVERSE ENDS, BOTTOM		6c5	-	-	-	-	-	-	10	VARIES	180	17	VARIES	288
SLAB TRANSVERSE ENDS, BOTTOM		6c6	-	-	-	-	-	-	10	VARIES	193	16	VARIES	319
SLAB TRANSVERSE TOP		5d1	87	23'-9	2155	87	24'-7	2231	80	23'-9	1982	72	23'-9	1784
SLAB TRANSVERSE TOP		5d2	87	21'-3	1928	87	22'-0	1996	81	21'-3	1795	74	21'-3	1640
SLAB TRANSVERSE ENDS, TOP		5d3	-	-	-	-	-	-	11	VARIES	157	18	VARIES	268
SLAB TRANSVERSE ENDS, TOP		5d4	-	-	-	-	-	-	10	VARIES	152	18	VARIES	252
SLAB TRANSVERSE ENDS, TOP		5d5	-	-	-	-	-	-	10	VARIES	125	17	VARIES	200
SLAB TRANSVERSE ENDS, TOP		5d6	-	-	-	-	-	-	10	VARIES	134	16	VARIES	222
SLAB, TRANSVERSE AT ABUTMENT		8e1	20	26'-4	1406	20	27'-1	1446	20	29'-6	1575	20	34'-8	1851
SLAB, TRANSVERSE AT ABUTMENT		8e2	20	21'-4	1139	20	22'-0	1175	20	24'-5	1304	20	29'-7	1580
SLAB, HAIRPINS, AT ABUTMENT		6e3	92	6'-10	944	92	6'-11	956	92	7'-3	1002	92	7'-11	1094
PIER CAP HOOPS		5h1	72	7'-3	544	72	7'-3	544	72	7'-3	544	108	7'-3	817
PIER CAP ENDS		8h2	4	14'-5	154	4	14'-5	154	4	14'-5	154	4	14'-5	154
PIER CAP, BOTTOM LONGITUDINAL		8h3	8	25'-5	543	8	26'-7	568	8	29'-4	627	8	35'-0	748
PIER CAP, BOTTOM LONGITUDINAL		8h4	8	19'-11	425	8	20'-3	433	8	22'-2	473	8	26'-10	573
PIER CAP, TOP LONGITUDINAL		8h5	4	26'-2	279	4	27'-5	293	4	30'-4	324	4	36'-1	385
PIER CAP, TOP LONGITUDINAL		8h6	4	21'-5	229	4	21'-10	233	4	23'-11	255	4	28'-8	306
TOP OF SLAB, TRANSVERSE, AT RAIL		5j1	172	8'-6	1525	172	8'-6	1525	166	8'-6	1472	164	8'-6	1454
WING, VERTICAL		5m1-4	32	SHOWN	117	32	SHOWN	117	32	SHOWN	117	32	SHOWN	117
WING, HORIZONTAL		5n1	24	6'-8	167	24	6'-8	167	24	6'-8	167	24	6'-8	167
PAVING SUPPORT, TRANSVERSE		5p1	40	8'-10	369	42	8'-10	387	46	8'-10	424	56	8'-10	516
PAVING SUPPORT LONGITUDINAL		5p3	6	22'-9	142	6	24'-0	150	6	26'-5	165	6	31'-9	199
PAVING SUPPORT LONGITUDINAL		5p4	6	20'-0	125	6	20'-9	130	6	23'-1	144	6	28'-3	177
SUB TOTAL - LBS.					55,677			56,198			56,958			58,403
BARRIER RAIL - SEE LIST ON RAIL SHEET J40-46-06					5642			5642			5642			5642
OPEN RAIL - SEE LIST ON RAIL SHEET J40-49-06					5907			5907			5907			5907
TOTAL - LBS.	WITH MONOLITHIC PIER CAP	WITH BARRIER RAIL			61,319			61,840			62,600			64,045
		WITH OPEN RAIL			61,584			62,105			62,865			64,310
TOTAL - LBS.	WITH NON-MONOLITHIC PIER CAP	WITH BARRIER RAIL			59,145			59,615			60,223			61,062
SAME AS ABOVE EXCEPT ALL "h" BARS DELETED		WITH OPEN RAIL			59,410			59,880			60,488			61,327

BENT BAR DETAILS

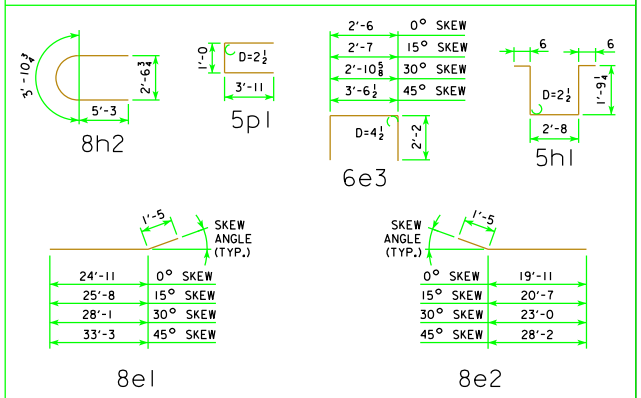

NOTE: ALL DIMENSIONS ARE OUT TO OUT. D = PIN DIAMETER.

NOTES:

ALL REINFORCING STEEL SHALL BE EPOXY COATED.

THE TRANSVERSE REBARS ARE DETAILED WITH A SPLICE LAP. AT THE CONTRACTOR'S OPTION, THIS LAP MAY BE ELIMINATED BY FURNISHING FULL LENGTH BARS WITH NO REDUCTION IN PAY WEIGHT FOR SAME.

ESTIMATED QUANTITIES FOR SUPERSTRUCTURE - 90' BRIDGE

ITEM		SKEW	WITH MONOLITHIC PIER CAP 0°	15°	30°	45°	WITH NON-MONOLITHIC PIER CAP 0°	15°	30°	45°
WITH BARRIER RAIL	*STRUCTURAL CONCRETE (BRIDGE)	C.Y.	237.8	239.2	243.9	254.1	231.8	233.0	237.0	245.7
	REINFORCING STEEL EPOXY COATED	LBS.	61,319	61,840	62,600	64,045	59,145	59,615	60,223	61,062
CONCRETE BARRIER OR OPEN RAIL		LIN. FT.	202.0	202.2	202.9	204.5	202.0	202.2	202.9	204.5
WITH OPEN RAIL	*STRUCTURAL CONCRETE (BRIDGE)	C.Y.	237.7	239.0	243.7	253.9	231.6	232.8	236.8	245.6
	REINFORCING STEEL EPOXY COATED	LBS.	61,584	62,105	62,865	64,310	59,410	59,880	60,488	61,327

* INCLUDES 4 WINGS @ 0.71 C.Y. EACH; EXCLUDES RAIL CONCRETE.

REVISED 12-07 - OPEN RAIL REINFORCING QUANTITY CHANGED

12-07
LATEST REVISION DATE

APPROVED BY BRIDGE ENGINEER

Iowa Department of Transportation
Highway Division

STANDARD DESIGN - 40' ROADWAY, 3 SPAN BRIDGES

CONTINUOUS CONCRETE SLAB BRIDGES

NOVEMBER, 2006

SUPERSTRUCTURE DETAILS
90'-0 BRIDGE

J40-07-06