BILL OF REINFORCING STEEL FOR SUPERSTRUCTURE - 70' BRIDGE

LOCATION	SHAPE	BAR	0° NO.	0° LENGTH	0° WEIGHT	15° NO.	15° LENGTH	15° WEIGHT	30° NO.	30° LENGTH	30° WEIGHT	45° NO.	45° LENGTH	45° WEIGHT
SLAB LONGITUDINAL BOTTOM		7a1	53	17'-1	1851	53	17'-1	1851	53	17'-1	1851	53	17'-1	1851
SLAB LONGITUDINAL BOTTOM		8a2	53	25'-0	3538	53	25'-0	3538	53	25'-0	3538	53	25'-0	3538
SLAB LONGITUDINAL BOTTOM		7a3	53	25'-4	2744	53	25'-4	2744	53	25'-4	2744	53	25'-4	2744
SLAB LONGITUDINAL BOTTOM		8a4	52	21'-10	3031	52	21'-10	3031	52	21'-10	3031	52	21'-10	3031
SLAB LONGITUDINAL BOTTOM		7a5	26	22'-0	1169	26	22'-0	1169	26	22'-0	1169	26	22'-0	1169
SLAB LONGITUDINAL BOTTOM, AT RAIL		7a6	8	25'-10	422	8	25'-10	422	8	25'-10	422	8	25'-10	422
SLAB LONGITUDINAL BOTTOM, AT RAIL		7a7	4	27'-4	223	4	27'-4	223	4	27'-4	223	4	27'-4	223
SLAB LONGITUDINAL BOTTOM, AT RAIL		8a8	8	19'-4	413	8	19'-4	413	8	19'-4	413	8	19'-4	413
SLAB LONGITUDINAL BOTTOM, AT RAIL		8a9	4	23'-6	251	4	23'-6	251	4	23'-6	251	4	23'-6	251
SLAB LONGITUDINAL TOP		6b1	53	7'-10	624	53	7'-10	624	53	7'-10	624	53	7'-10	624
SLAB LONGITUDINAL TOP		8b2	53	18'-3	2583	53	18'-3	2583	53	18'-3	2583	53	18'-3	2583
SLAB LONGITUDINAL TOP		8b3	53	26'-4	3726	53	26'-4	3726	53	26'-4	3726	53	26'-4	3726
SLAB LONGITUDINAL TOP		7b4	52	21'-1	2241	52	21'-1	2241	52	21'-1	2241	52	21'-1	2241
SLAB LONGITUDINAL TOP		8b5	52	12'-6	1736	52	12'-6	1736	52	12'-6	1736	52	12'-6	1736
SLAB LONGITUDINAL TOP		6b6	26	20'-4	794	26	20'-4	794	26	20'-4	794	26	20'-4	794
SLAB LONGITUDINAL TOP, AT RAIL		8b8	8	38'-10	829	8	38'-10	829	8	38'-10	829	8	38'-10	829
SLAB LONGITUDINAL TOP, AT RAIL		8b9	8	28'-10	616	8	28'-10	616	8	28'-10	616	8	28'-10	616
SLAB TRANSVERSE BOTTOM		6c1	67	23'-5	2357	67	24'-3	2440	60	23'-5	2110	52	23'-5	1829
SLAB TRANSVERSE BOTTOM		6c2	67	21'-3	2138	67	22'-0	2214	61	21'-3	1947	54	21'-3	1724
SLAB TRANSVERSE ENDS, BOTTOM		6c3	-	-	-	-	-	-	11	VARIES	226	18	VARIES	386
SLAB TRANSVERSE ENDS, BOTTOM		6c4	-	-	-	-	-	-	10	VARIES	219	18	VARIES	363
SLAB TRANSVERSE ENDS, BOTTOM		6c5	-	-	-	-	-	-	10	VARIES	180	17	VARIES	288
SLAB TRANSVERSE ENDS, BOTTOM		6c6	-	-	-	-	-	-	10	VARIES	193	16	VARIES	319
SLAB TRANSVERSE TOP		5d1	67	23'-9	1660	67	24'-7	1718	60	23'-9	1486	52	23'-9	1288
SLAB TRANSVERSE TOP		5d2	67	21'-3	1485	67	22'-0	1537	61	21'-3	1352	54	21'-3	1197
SLAB TRANSVERSE ENDS, TOP		5d3	-	-	-	-	-	-	11	VARIES	157	18	VARIES	268
SLAB TRANSVERSE ENDS, TOP		5d4	-	-	-	-	-	-	10	VARIES	152	18	VARIES	252
SLAB TRANSVERSE ENDS, TOP		5d5	-	-	-	-	-	-	10	VARIES	125	17	VARIES	200
SLAB TRANSVERSE ENDS, TOP		5d6	-	-	-	-	-	-	10	VARIES	134	16	VARIES	222
SLAB, TRANSVERSE AT ABUTMENT		8e1	20	26'-4	1406	20	27'-1	1446	20	29'-6	1575	20	34'-8	1851
SLAB, TRANSVERSE AT ABUTMENT		8e2	20	21'-4	1139	20	22'-0	1175	20	24'-5	1304	20	29'-7	1580
SLAB, HAIRPINS, AT ABUTMENT		6e3	92	6'-10	944	92	6'-11	956	92	7'-3	1002	92	7'-11	1094
PIER CAP HOOPS		5h1	72	6'-11	519	72	6'-11	519	72	6'-11	519	108	6'-11	779
PIER CAP ENDS		8h2	4	14'-5	154	4	14'-5	154	4	14'-5	154	4	14'-5	154
PIER CAP, BOTTOM LONGITUDINAL		8h3	8	25'-5	543	8	26'-7	568	8	29'-4	627	8	35'-0	748
PIER CAP, BOTTOM LONGITUDINAL		8h4	8	19'-11	425	8	20'-3	433	8	22'-2	473	8	26'-10	573
PIER CAP, TOP LONGITUDINAL		8h5	4	26'-2	279	4	27'-5	293	4	30'-4	324	4	36'-1	385
PIER CAP, TOP LONGITUDINAL		8h6	4	21'-5	229	4	21'-10	233	4	23'-11	255	4	28'-8	306
TOP OF SLAB, TRANSVERSE, AT RAIL		5j1	132	8'-6	1170	132	8'-6	1170	126	8'-6	1117	124	8'-6	1099
WING, VERTICAL		5m1-4	32	SHOWN	117	32	SHOWN	117	32	SHOWN	117	32	SHOWN	117
WING, HORIZONTAL		5n1	24	6'-8	167	24	6'-8	167	24	6'-8	167	24	6'-8	167
PAVING SUPPORT, TRANSVERSE		5p1	40	8'-10	369	42	8'-10	387	46	8'-10	424	56	8'-10	516
PAVING SUPPORT LONGITUDINAL		5p3	6	22'-9	142	6	24'-0	150	6	26'-5	165	6	31'-9	199
PAVING SUPPORT LONGITUDINAL		5p4	6	20'-0	125	6	20'-9	130	6	23'-1	144	6	28'-3	177
SUB TOTAL - LBS.					42,159			42,598			43,439			44,872
BARRIER RAIL - SEE LIST ON RAIL SHEET J40-46-06					4649			4649			4649			4649
OPEN RAIL - SEE LIST ON RAIL SHEET J40-49-06					4677			4677			4677			4677
TOTAL - LBS.	WITH MONOLITHIC PIER CAP	WITH BARRIER RAIL			46,808			47,247			48,088			49,521
		WITH OPEN RAIL			46,836			47,275			48,116			49,549
TOTAL - LBS.	WITH NON-MONOLITHIC PIER CAP	WITH BARRIER RAIL			44,659			45,047			45,736			46,576
SAME AS ABOVE EXCEPT ALL "h" BARS DELETED		WITH OPEN RAIL			44,687			45,075			45,764			46,604

BENT BAR DETAILS

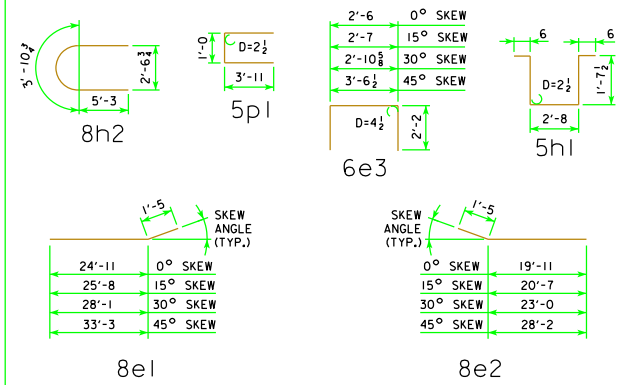

NOTE: ALL DIMENSIONS ARE OUT TO OUT. D = PIN DIAMETER.

NOTES:

ALL REINFORCING STEEL SHALL BE EPOXY COATED.

THE TRANSVERSE REBARS ARE DETAILED WITH A SPLICE LAP. AT THE CONTRACTOR'S OPTION, THIS LAP MAY BE ELIMINATED BY FURNISHING FULL LENGTH BARS WITH NO REDUCTION IN PAY WEIGHT FOR SAME.

ESTIMATED QUANTITIES FOR SUPERSTRUCTURE - 70' BRIDGE

ITEM		SKEW	WITH MONOLITHIC PIER CAP 0°	15°	30°	45°	WITH NON-MONOLITHIC PIER CAP 0°	15°	30°	45°
WITH BARRIER RAIL	*STRUCTURAL CONCRETE (BRIDGE)	C.Y.	178.9	180.3	185.1	195.5	172.2	174.1	178.2	187.1
	REINFORCING STEEL EPOXY COATED	LBS.	46,808	47,247	48,088	49,521	44,659	45,047	45,736	46,576
CONCRETE BARRIER OR OPEN RAIL		LIN. FT.	162.0	162.2	162.9	164.5	162.0	162.2	162.9	164.5
WITH OPEN RAIL	*STRUCTURAL CONCRETE (BRIDGE)	C.Y.	178.7	180.1	184.9	195.3	172.7	173.9	178.0	186.9
	REINFORCING STEEL EPOXY COATED	LBS.	46,836	47,275	48,116	49,549	44,687	45,075	45,764	46,604

* INCLUDES 4 WINGS @ 0.71 C.Y. EACH; EXCLUDES RAIL CONCRETE.

REVISED 12-07 - OPEN RAIL REINFORCING QUANTITY CHANGED

12-07
LATEST REVISION DATE

APPROVED BY BRIDGE ENGINEER

Iowa Department of Transportation
Highway Division

STANDARD DESIGN - 40' ROADWAY, 3 SPAN BRIDGES

CONTINUOUS CONCRETE SLAB BRIDGES

NOVEMBER, 2006

SUPERSTRUCTURE DETAILS
70'-0 BRIDGE

J40-03-06