BILL OF REINFORCING STEEL FOR SUPERSTRUCTURE - 90' BRIDGE

LOCATION / SKEW	SHAPE	BAR	0° NO.	0° LENGTH	0° WEIGHT	15° NO.	15° LENGTH	15° WEIGHT	30° NO.	30° LENGTH	30° WEIGHT	45° NO.	45° LENGTH	45° WEIGHT
SLAB LONGITUDINAL BOTTOM		8a1	39	20'-1	2092	39	20'-1	2092	39	20'-1	2092	39	20'-1	2092
SLAB LONGITUDINAL BOTTOM		8a2	39	28'-3	2942	39	28'-3	2942	39	28'-3	2942	39	28'-3	2942
SLAB LONGITUDINAL BOTTOM		8a3	39	26'-6	2760	39	26'-6	2760	39	26'-6	2760	39	26'-6	2760
SLAB LONGITUDINAL BOTTOM		8a4	40	25'-7	2733	40	25'-7	2733	40	25'-7	2733	40	25'-7	2733
SLAB LONGITUDINAL BOTTOM		8a5	20	27'-0	1442	20	27'-0	1442	20	27'-0	1442	20	27'-0	1442
SLAB LONGITUDINAL BOTTOM, AT RAIL		8a6	8	33'-4	712	8	33'-4	712	8	33'-4	712	8	33'-4	712
SLAB LONGITUDINAL BOTTOM, AT RAIL		8a7	4	31'-8	339	4	31'-8	339	4	31'-8	339	4	31'-8	339
SLAB LONGITUDINAL BOTTOM, AT RAIL		8a8	8	22'-10	488	8	22'-10	488	8	22'-10	488	8	22'-10	488
SLAB LONGITUDINAL BOTTOM, AT RAIL		8a9	4	19'-0	203	4	19'-0	203	4	19'-0	203	4	19'-0	203
SLAB LONGITUDINAL TOP		6b1	39	6'-7	386	39	6'-7	386	39	6'-7	386	39	6'-7	386
SLAB LONGITUDINAL TOP		9b2	39	21'-3	2818	39	21'-3	2818	39	21'-3	2818	39	21'-3	2818
SLAB LONGITUDINAL TOP		9b3	39	33'-1	4387	39	33'-1	4387	39	33'-1	4387	39	33'-1	4387
SLAB LONGITUDINAL TOP		6b4	40	11'-7	696	40	11'-7	696	40	11'-7	696	40	11'-7	696
SLAB LONGITUDINAL TOP		9b5	40	26'-0	3536	40	26'-0	3536	40	26'-0	3536	40	26'-0	3536
SLAB LONGITUDINAL TOP		6b6	20	17'-6	526	20	17'-6	526	20	17'-6	526	20	17'-6	526
SLAB LONGITUDINAL TOP, AT RAIL		6b8	8	25'-0	301	8	25'-0	301	8	25'-0	301	8	25'-0	301
SLAB LONGITUDINAL TOP, AT RAIL		9b9	8	18'-0	490	8	18'-0	490	8	18'-0	490	8	18'-0	490
SLAB LONGITUDINAL TOP, AT RAIL		6b10	4	18'-4	111	4	18'-4	111	4	18'-4	111	4	18'-4	111
SLAB LONGITUDINAL TOP, AT RAIL		6b11	8	27'-6	331	8	27'-6	331	8	27'-6	331	8	27'-6	331
SLAB LONGITUDINAL TOP, AT RAIL		10b12	8	11'-9	405	8	11'-9	405	8	11'-9	405	8	11'-9	405
SLAB TRANSVERSE, BOTTOM		6c1	87	32'-10	4291	87	34'-0	4443	76	32'-10	3748	64	32'-10	3157
SLAB TRANSVERSE ENDS, BOTTOM		6c2	-	-	-	-	-	-	28	VARIES	800	52	VARIES	1426
SLAB TRANSVERSE, TOP		5d1	87	32'-10	2980	87	34'-0	3086	76	32'-10	2603	64	32'-10	2192
SLAB TRANSVERSE ENDS, TOP		5d2	-	-	-	-	-	-	28	VARIES	555	52	VARIES	990
SLAB, TRANSVERSE AT ABUTMENT		8e1	20	32'-10	1754	-	-	-	-	-	-	-	-	-
SLAB, TRANSVERSE AT ABUTMENT		8e2	-	-	-	20	33'-11	1812	20	37'-6	2003	20	45'-4	2421
SLAB HAIRPINS, AT ABUTMENT		6e3	72	6'-10	739	72	6'-11	748	72	7'-3	785	72	7'-11	857
PIER CAP HOOPS		5h1	56	7'-3	424	56	7'-3	424	56	7'-3	424	70	7'-3	530
PIER CAP ENDS		8h2	4	14'-5	154	4	14'-5	154	4	14'-5	154	4	14'-5	154
PIER CAP, BOTTOM LONGITUDINAL		8h3	8	29'-10	638	8	30'-11	661	8	34'-5	736	8	42'-2	901
PIER CAP,TOP LONGITUDINAL		8h4	4	32'-10	351	4	34'-0	364	4	37'-11	405	4	46'-6	497
TOP OF SLAB, TRANSVERSE, AT RAIL		5j1	172	8'-6	1525	172	8'-6	1525	172	8'-6	1525	170	8'-6	1508
WING VERTICAL		5m1-4	32	SHOWN	117	32	SHOWN	117	32	SHOWN	117	32	SHOWN	117
WING, HORIZONTAL		5n1	24	6'-8	167	24	6'-8	167	24	6'-8	167	24	6'-8	167
PAVING SUPPORT, TRANSVERSE		5p1	30	8'-10	277	32	8'-10	295	34	8'-10	314	42	8'-10	387
PAVING SUPPORT, LONGITUDINAL		5p3	6	30'-2	189	6	31'-3	196	6	34'-10	218	6	42'-7	267
SUB TOTAL - LBS.					41,304			41,690			42,252			43,269
BARRIER RAIL - SEE LIST ON RAIL SHEET J30-41-06					5642			5642			5642			5642
OPEN RAIL - SEE LIST ON RAIL SHEET J30-44-06					5907			5907			5907			5907
TOTAL - LBS. WITH MONOLITHIC PIER CAP		WITH BARRIER RAIL			46,946			47,332			47,894			48,911
		WITH OPEN RAIL			47,211			47,597			48,159			49,176
TOTAL - LBS. WITH NON-MONOLITHIC PIER CAP		WITH BARRIER RAIL			45,379			45,729			46,175			46,829
SAME AS ABOVE EXCEPT ALL "h" BARS DELETED		WITH OPEN RAIL			45,644			45,994			46,440			47,094

BENT BAR DETAILS

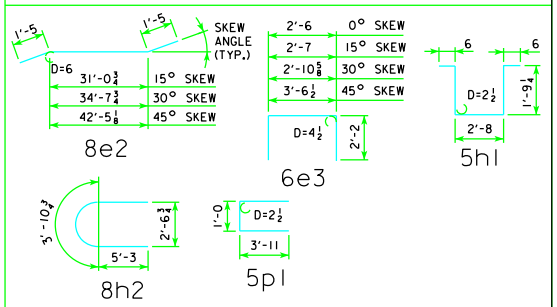

NOTE: ALL DIMENSIONS ARE OUT TO OUT. D = PIN DIAMETER.

ESTIMATED QUANTITIES FOR SUPERSTRUCTURE - 90' BRIDGE

ITEM		SKEW	WITH MONOLITHIC PIER CAP 0°	15°	30°	45°	WITH NON-MONOLITHIC PIER CAP 0°	15°	30°	45°
WITH	*STRUCTURAL CONCRETE (BRIDGE)	C.Y.	183.2	184.3	187.8	195.6	178.2	179.1	182.2	188.7
BARRIER RAIL	REINFORCING STEEL	LBS.	46,946	47,332	47,894	48,911	45,379	45,729	46,175	46,829
	CONCRETE BARRIER OR OPEN RAIL	LIN. FT.	202.0	202.2	202.9	204.5	202.0	202.2	202.9	204.5
WITH	*STRUCTURAL CONCRETE (BRIDGE)	C.Y.	183.0	184.1	187.7	195.4	178.1	179.0	182.0	188.6
OPEN RAIL	REINFORCING STEEL	LBS.	47,211	47,597	48,159	49,176	45,644	45,994	46,440	47,094

* INCLUDES 4 WINGS @ 0.71 C.Y. EACH; EXCLUDES RAIL CONCRETE.

REVISED 12-07 - OPEN RAIL REINFORCING QUANTITY CHANGED

12-07
LATEST REVISION DATE

APPROVED BY BRIDGE ENGINEER

Iowa Department of Transportation
Highway Division

STANDARD DESIGN - 30' ROADWAY, 3 SPAN BRIDGES

CONTINUOUS CONCRETE SLAB BRIDGES

NOVEMBER, 2006

SUPERSTRUCTURE DETAILS
90'-0 BRIDGE

NON-EPOXY COATED REINFORCING

J30-07B-06