TABLE OF OPEN RAIL DIMENSIONS AND NUMBERS

℄-℄ ABUT. BRG		70'-0				80'-0				90'-0				100'-0			
SKEW		0°	15°	30°	45°	0°	15°	30°	45°	0°	15°	30°	45°	0°	15°	30°	45°
DIMENSION OR NUMBER	A (FT.-IN.)	81'-0	81'-1 1/4	81'-5 1/2	82'-3	91'-0	91'-1 1/4	91'-5 1/2	92'-3	101'-0	101'-1 1/4	101'-5 1/2	102'-3	111'-0	111'-1 1/4	111'-5 1/2	112'-3
	B (FT.-IN.)	67'-0	67'-1 1/4	67'-5 1/2	68'-3	77'-0	77'-1 1/4	77'-5 1/2	78'-3	87'-0	87'-1 1/4	87'-5 1/2	88'-3	97'-0	97'-1 1/4	97'-5 1/2	98'-3
	C	8	8	8	8	10	10	10	10	11	11	11	11	12	12	12	12
	D (FT.-IN.)	7'-10 1/2	7'-10 11/16	7'-11 3/16	7'-11 7/8	7'-3 5/8	7'-3 3/4	7'-4 3/16	7'-4 11/16	7'-6 9/16	7'-6 11/16	7'-7 1/16	7'-7 9/16	7'-9	7'-9 1/8	7'-9 7/16	7'-9 15/16

℄-℄ ABUT. BRG		110'-0				120'-0				130'-0				140'-0				150'-0			
SKEW		0°	15°	30°	45°	0°	15°	30°	45°	0°	15°	30°	45°	0°	15°	30°	45°	0°	15°	30°	45°
DIMENSION OR NUMBER	A (FT.-IN.)	121'-0	121'-1 1/4	121'-5 1/2	122'-3	131'-0	131'-1 1/4	131'-5 1/2	132'-3	141'-0	141'-1 1/4	141'-5 1/2	142'-3	151'-0	151'-1 1/4	151'-5 1/2	152'-3	161'-0	161'-1 1/4	161'-5 1/2	162'-3
	B (FT.-IN.)	107'-0	107'-1 1/4	107'-5 1/2	108'-3	117'-0	117'-1 1/4	117'-5 1/2	118'-3	127'-0	127'-1 1/4	127'-5 1/2	128'-3	137'-0	137'-1 1/4	137'-5 1/2	138'-3	147'-0	147'-1 1/4	147'-5 1/2	148'-3
	C	13	13	13	13	15	15	15	15	16	16	16	16	17	17	17	17	18	18	18	18
	D (FT.-IN.)	7'-11 1/16	7'-11 3/16	7'-11 1/2	7'-11 15/16	7'-6 3/8	7'-6 1/2	7'-6 3/4	7'-7 1/8	7'-8 1/4	7'-8 5/16	7'-8 5/8	7'-8 15/16	7'-9 3/8	7'-9 15/16	7'-10 3/16	7'-10 1/2	7'-11 5/16	7'-11 3/8	7'-11 7/8	7'-11 15/16

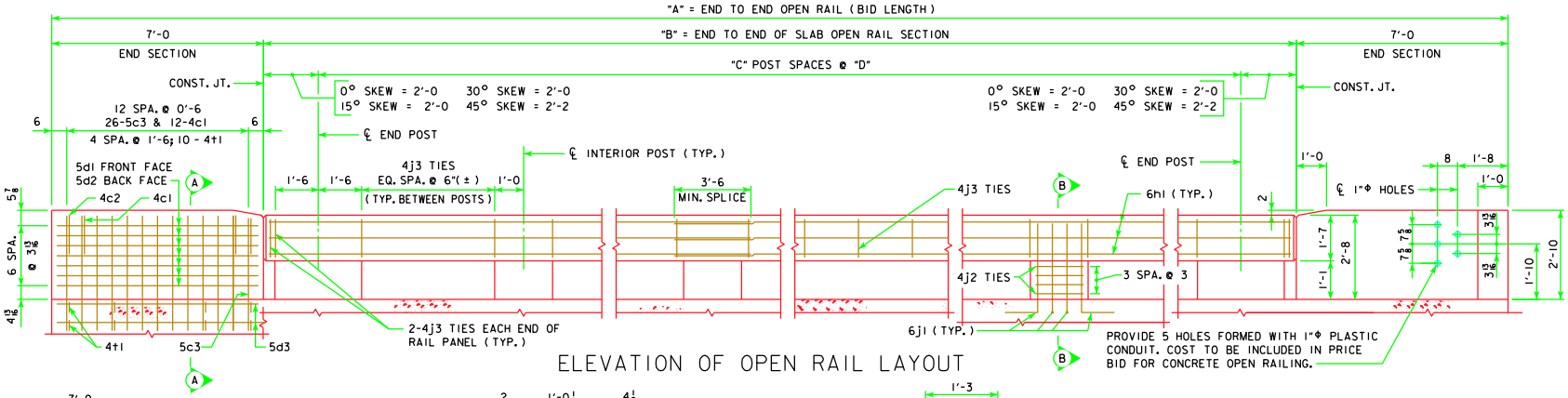

ELEVATION OF OPEN RAIL LAYOUT

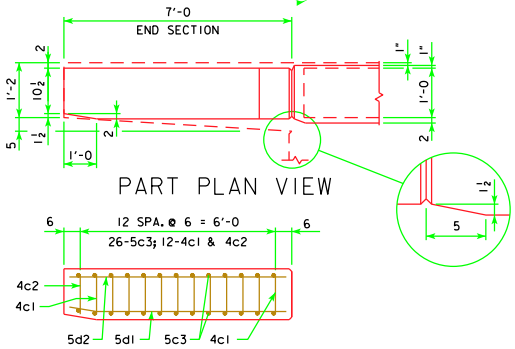

PART PLAN VIEW

PART PLAN SECTION

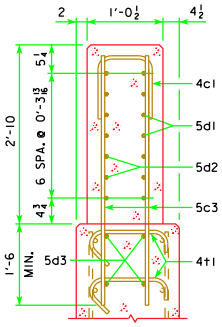

SECTION A-A

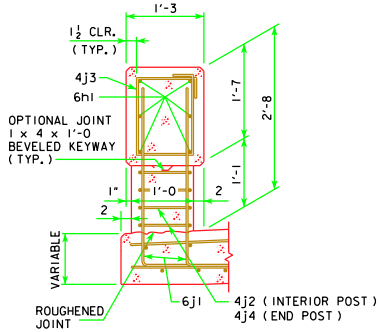

PART SECTION B-B

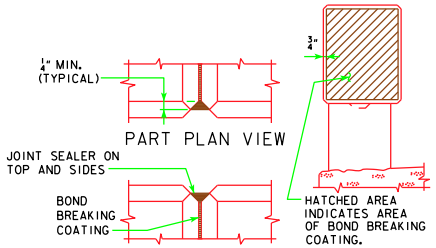

PART PLAN VIEW

PART ELEVATION VIEW

OPEN RAIL JOINT DETAILS

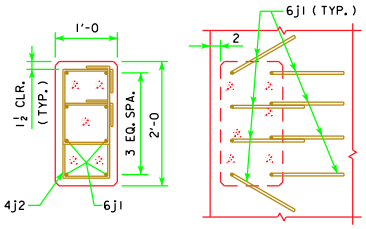

INTERIOR POST DETAILS

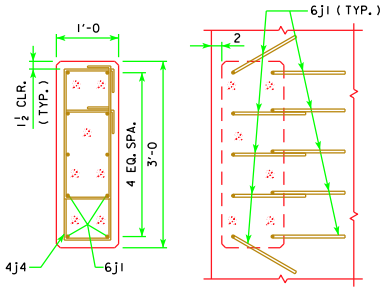

END POST DETAILS (REQUIRED AT ENDS OF OPEN RAIL)

REVISED 12-07 - PART SEC B-B MODIFIED TO SHOW VARIABLE DEPTH

12-07
LATEST REVISION DATE

APPROVED BY BRIDGE ENGINEER

Iowa Department of Transportation
Highway Division

STANDARD DESIGN - 30' ROADWAY, 3 SPAN BRIDGES

CONTINUOUS CONCRETE SLAB BRIDGES

NOVEMBER, 2006

OPEN RAIL DETAILS (TL-4)

J30-43-06