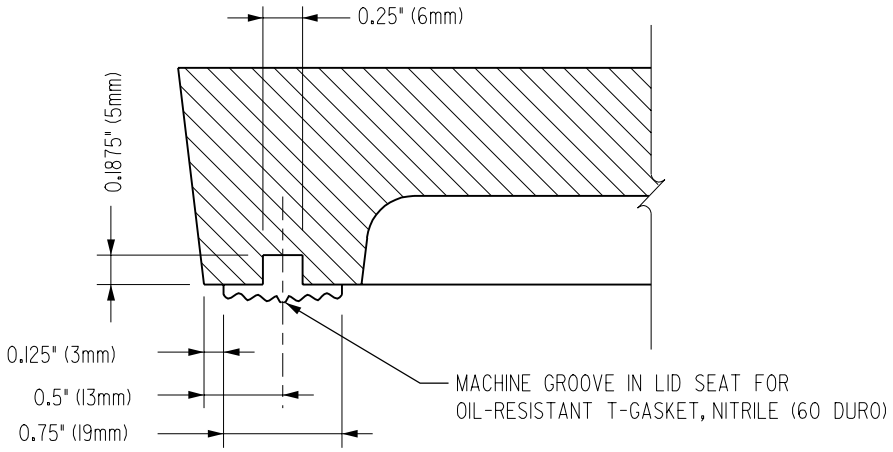

GROOVE DETAIL

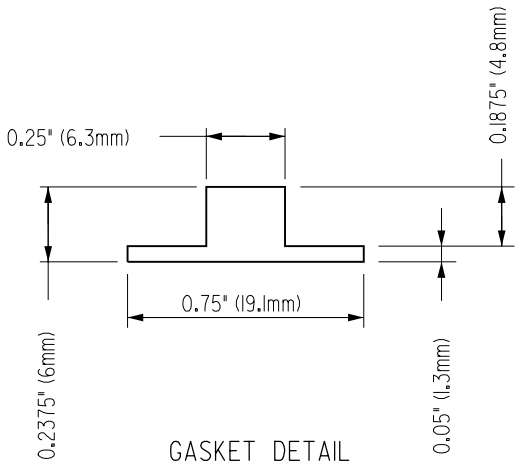

GASKET DETAIL

REV.	DATE	BY	MANHOLE COVER GASKET (SANITARY SEWER)	FIGURE: 6020.11
DATE: 01-01-98				SHEET 1 OF 1