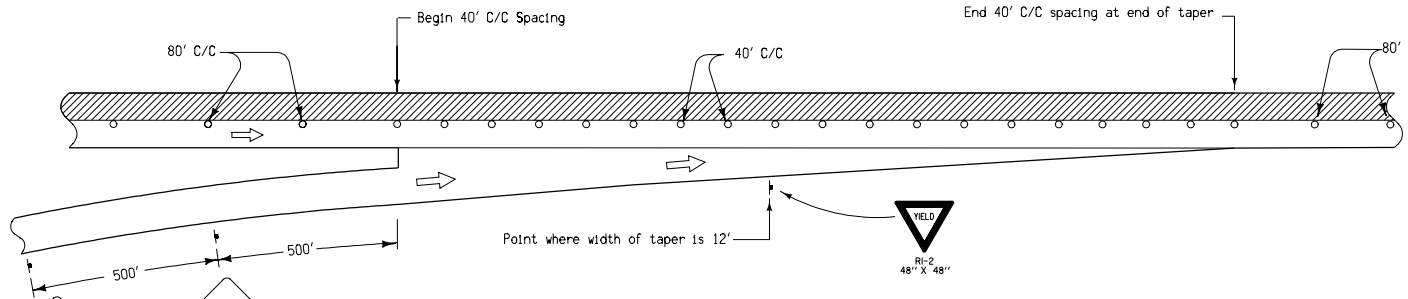

LEFT LANE CLOSURE THROUGH ENTRANCE RAMP

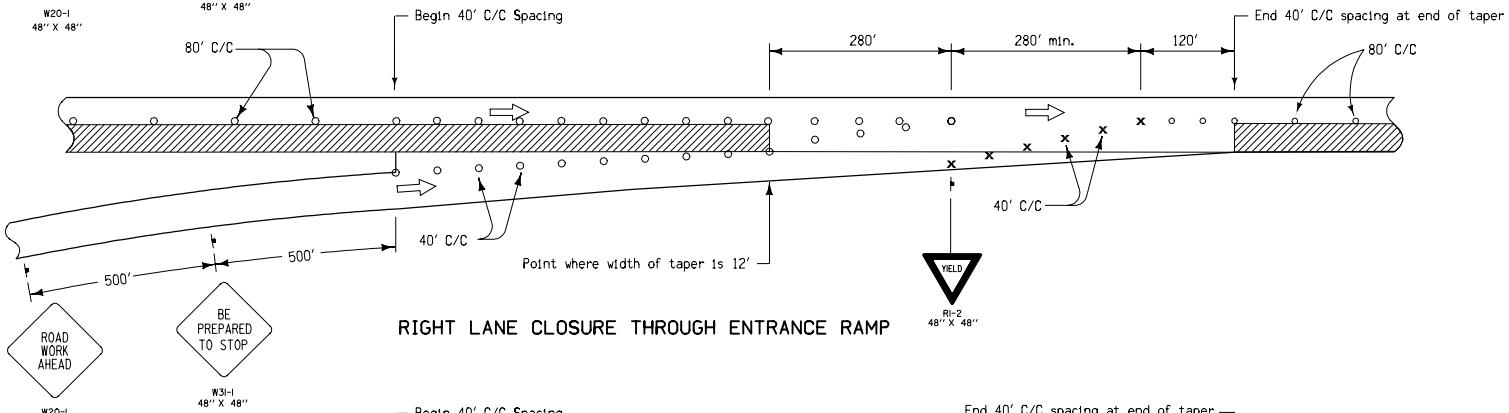

RIGHT LANE CLOSURE THROUGH ENTRANCE RAMP

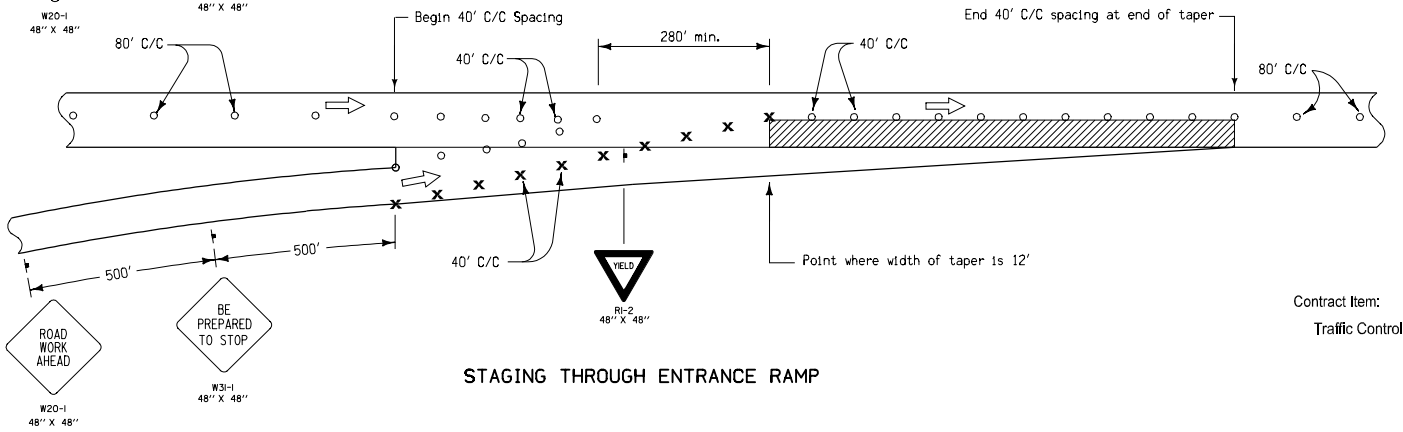

STAGING THROUGH ENTRANCE RAMP

LEGEND

- Traffic Sign
- Drum
- 42" Channelizer or Vertical Panel
- Direction of Traffic
- Work Area

Contract Item:

Traffic Control

Iowa Department of Transportation

STANDARD ROAD PLAN

REVISION	
1	04-17-07

TC-420

SHEET 1 of 2

REVISIONS: Added temporary EXIT sign and note to sheet 2.

Deanna Maifield

APPROVED BY DESIGN METHODS ENGINEER

LANE CLOSURE AT RAMPS

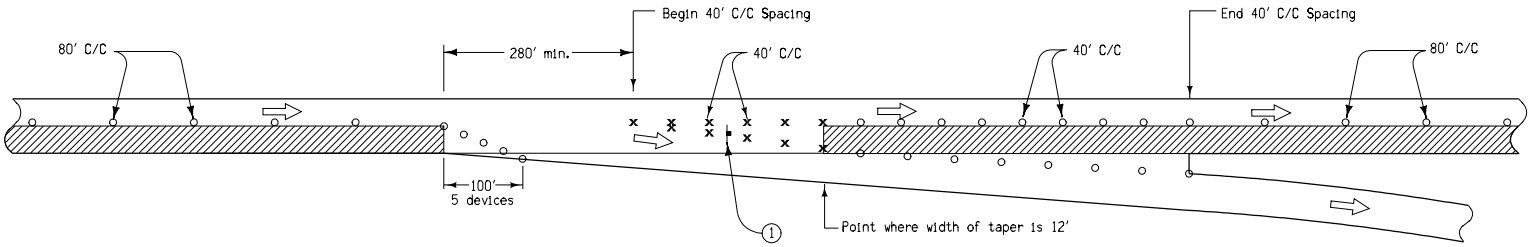

RIGHT LANE CLOSURE THROUGH EXIT RAMP

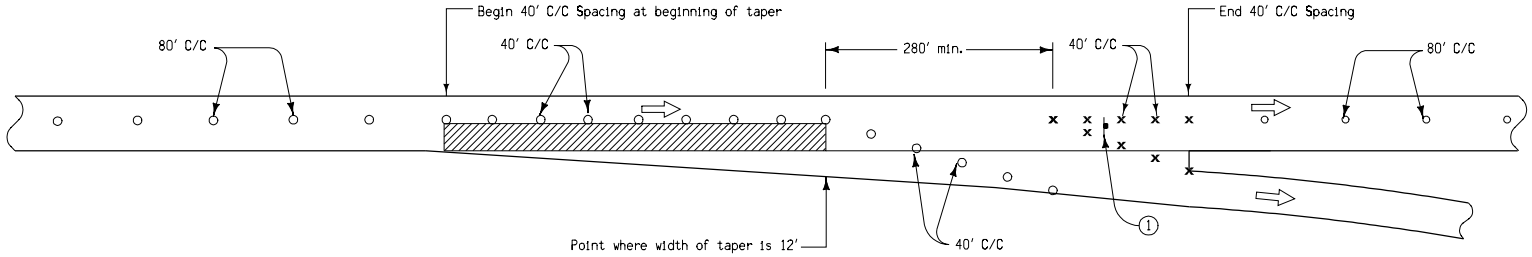

STAGING THROUGH EXIT RAMP

(1) Temporary EXIT sign, mounted so that bottom of sign is a minimum of 3 feet above pavement surface. If in place for more than one day, mount an Exit Number Panel with the proper exit number above the temporary EXIT sign. See RD-65 for details.

LEGEND

- Traffic Sign
- Drum
- 42" Channelizer or Vertical Panel
- Direction of Traffic
- Work Area

Iowa Department of Transportation

STANDARD ROAD PLAN

REVISION	
1	04-17-07

TC-420

SHEET 2 of 2

REVISIONS: Added temporary EXIT sign and note to sheet 2.

Deanna Maifield
APPROVED BY DESIGN METHODS ENGINEER

LANE CLOSURE AT RAMPS