QUALIFICATION TESTS FOR FIELD WELDERS

STATEMENT OF INTENT

The intent of this Instructional Memorandum is to address the testing of field welders and limit the testing to only those who can be reasonably expected to weld on a bridge structure.

WELDER QUALIFICATION

All welders are required to be qualified before they will be permitted to weld on any bridge structure being built using the Iowa Department of Transportation Standard Specifications. The qualification of these welders shall conform to the Bridge Welding Code AASHTO/AWS D1.5M / D1.5 : 2002, and the Iowa Department of Transportation Standard Specifications.

Welder qualifications herein specified will be considered as remaining in effect from the end of the month in which the test was taken, for a period of one year. For welders who have successfully passed their qualification tests without failure for three consecutive years, requalification will only be required every two years.

Welder requalification may be required at any time there is a specific reason to question his/her ability to make sound welds.

QUALIFICATION TEST

The Qualification Test shall be taken under Iowa Department of Transportation supervision or their authorized representative.

The tests described herein are to determine the welder's ability to produce sound welds.

Qualification tests for manual and semi-automatic welders shall be:

Qualification Test for Limited Thickness

Joint detail as follows:

> 3/8 in. (9 mm) plate, single V groove, 45° included angle, 1/4 in.(6 mm) root opening with backing. Minimum length of welding shall be 7 in. (180 mm). Figure 5.19 of AASHTO/AWS D1.5M / D1.5 : 2002.

Test Specimens -- one face and one root-bend specimen.

This test will qualify the welder for groove welds not over 3/4 in. (19 mm) in thickness, and fillet welds on material of unlimited thickness for the test positions shown in the paragraph entitled Position of Test Welds.

For groove welds over 3/4 in. (19 mm) in thickness, additional 1 in. (25 mm) thick qualification test(s) may be required by the engineer.

Full information regarding the welder shall be furnished on the Qualification Test Record for the purposes of billing and issuance of a certificate.

FAILURE OF TESTS

A welder failing a weld test is immediately disqualified for those positions represented by the test position in which he/she failed, and must retest within one month by fabricating two weld test plates of the type and position of which he/she failed, both of which must pass. Failure to retest within one month shall be considered as failure of the retest.

FAILURE OF RETEST

A welder that fails a retest may not retest again for six months for the failed position. After six months, the welder may retest by fabricating two weld tests plates of the type & position, which previously failed, both of which must pass.

TEST FEES

A fee of $125 per test plate or retest plate will be charged for qualification or requalification tests. The Central Materials Office will initiate billing requests through the Office of Finance.

POSITION OF TEST WELDS

Qualification Test		Type of Weld & Position Of Welding Qualified*	
			Plate & Pipe
Weld	Position	Groove	Plate Fillet
Plate-Groove	1G	F	F, H
	2G	F, H	F, H
	3G	F, H, V	F, H, V
	4G	F, OH	F, H, OH
	3G & 4G	All	All

*Positions of welding:

F=Flat	1G=Flat Groove	1F=Flat Fillet
H=Horizontal	2G=Horizontal Groove	2F=Horizontal Fillet
V=Vertical	3G=Vertical Groove	3F=Vertical Fillet
OH=Overhead	4G=Overhead Groove	4F=Overhead Fillet

WELDING OF PLATES

In making up test welds, the welder should restrain the warping of the assembly through the use of clamps to maintain a flat sample. Plates shall not be stress relieved or straightened after welding.

Cleaning between weld passes shall be limited to hand chipping and hand wire brushing. Power chippers or grinders shall not be used during the weld test. Weld cleaning shall be done with the test weld in the same position as the welding position being qualified.

All vertical welds for grooves or fillets for field, plant or test plates shall be made with the progression for all passes in the upward direction.

ELECTRODES

Only low-hydrogen electrodes will be permitted for the certification of SMAW welders.

The following list of SMAW, GMAW, or FCAW electrodes are approved for use provided the proper minimum preheat and interpass temperatures are maintained as outlined in the paragraph entitled Minimum Preheat and Interpass Temperature.

Shielded Metal Arc	Gas Metal Arc	Flux-Cored Arc w/External Shielding Gas	Flux-Cored Arc-Self Shielding
E-XX16	ER70S-2,		E6XT-6,8
E-XX18	3, 6 or 7	E7XT-1,5	E7XT-6,8

The XX designation shall be understood to mean the 70 series unless an alloy steel of higher strength is to be welded. The X before the T stands for a 0 or 1, which refers to the usability of the electrode. "O" indicates use limited to flat or horizontal positions and "1" indicates all position use.

Suitable ovens must be provided to insure the dryness of all approved low-hydrogen electrodes. Wherever this is not practical, electrodes must be purchased in small packages, and any left over at the end of four hours must be discarded, or redried for at least two hours between 450°F (230°C) and 500°F (260°C). Electrodes held in storage after opening a new hermetically sealed package, or after being redried, shall be stored in an oven with a temperature of at least 250°F (120°C).

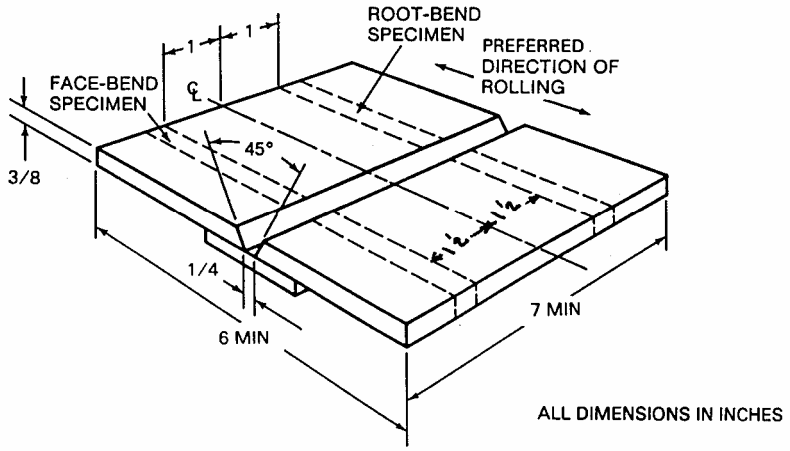

Figure 5.19
Test Plate for Limited Thickness - All Positions - Welder Qualification (See 5.23.1.3)

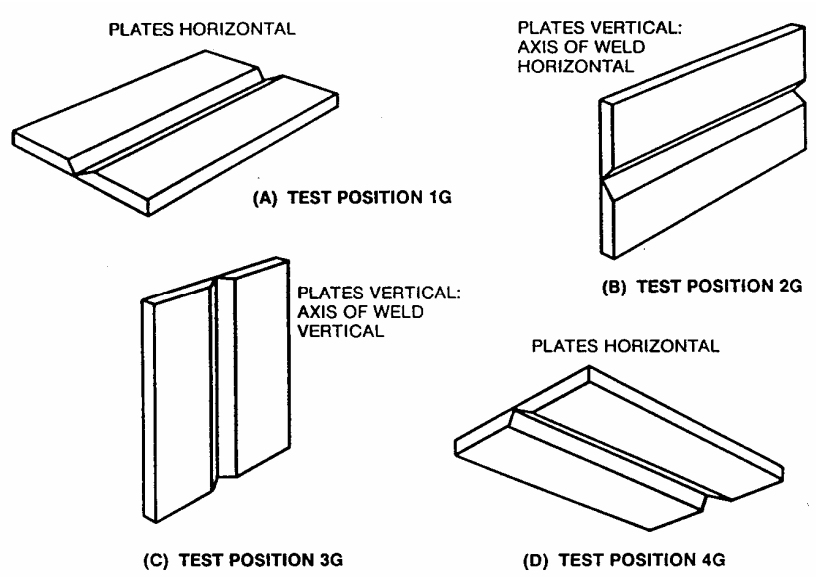

Figure 5.6 - Position of Test Plates for Groove Welds (See 5.8.2)

MINIMUM PREHEAT AND INTERPASS TEMPERATURE [1,2].

The minimum preheat and interpass temperature for welding shall be as outlined in the specifications.

For the benefit of welders, the following table is published:

Welding Process	
Thickness of Thickest part at Point of Welding	Shielded Metal-Arc Welding With Low-Hydrogen, Gas Metal Arc, Or Flux-Cored Arc Electrode A709 Gr. 36
To 3/4 in. (19 mm) Inc.	50°F (10°C)
Over 3/4 in. to 1 1/2 in. Inc. (19 mm to 38 mm)	70°F (20°C)
Over 1 1/2 in. to 2 1/2 in. Inc. (38 mm to 63.5 mm)	150°F (65°C)
Over 2½ in. (63.5 mm)	225°F (110°C)

NOTE:

1. Welding shall not be done when the ambient temperature is lower than 0°F (-18°C).
2. When preheating of the base metal is required, it shall be performed in such a manner that the surface of the parts on which weld metal is being deposited, within 3 in. (76 mm) of the point of welding, both laterally and in advance of the welding, are at or above the temperature specified.

JOINT WELDING PROCEDURE SPECIFICATION

Material specification _____
Welding process _____
Manual or machine _____
Position of welding _____
Filler metal specification _____
Filler metal classification _____
Flux _____
Shielding gas _____ Flow rate _____
Single or multiple pass _____
Single or multiple arc _____
Welding current _____
Polarity _____
Welding progression _____
Root treatment _____
Preheat and interpass temperature _____
Postheat treatment _____
Heat Input Min _____ Max _____

WELDING PROCEDURE

Pass no.	Electrode size	Welding current		Travel speed	Joint detail
		Amperes	Volts		

This procedure may vary due to fabrication sequence, fit-up, pass size, etc., within the limitation of variables given in Section 5.

Procedure no. _____ Contractor _____

Revision no. _____ Authorized by _____

Date _____