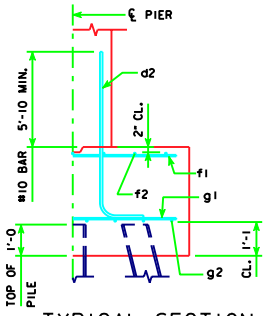

TYPICAL SECTION

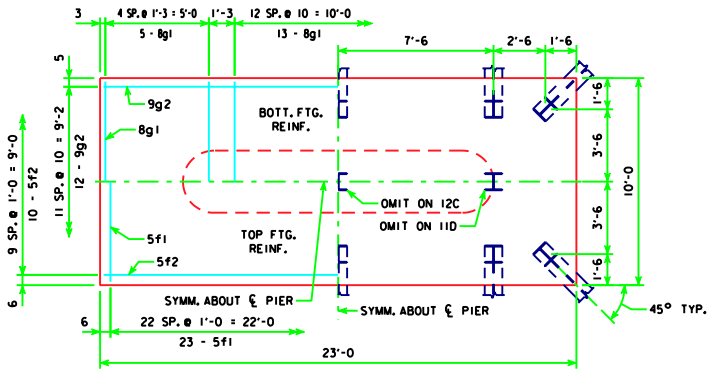

4'-0 x 10'-0 x 23'-0 FOR 11D & 12C

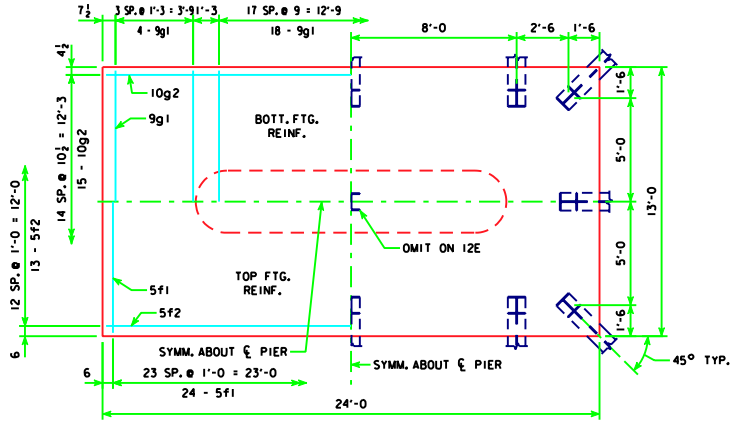

4'-0 x 13'-0 x 24'-0 FOR 12E & 13A

H IN FT.	℄ - ℄ ABUT. BRG.	PILING NO. & LAYOUT	PILING DES. BRG. (TONS)	FOOTING SIZE
25 TO 27	201'-4	11D	48	4' x 10' x 23'
	213'-10	11D	50	
	226'-4	12C	47	
	243'-0	12C	49	
28 TO 30	201'-4	12D	44	4' x 11' x 23'
	213'-10	12D	46	
	226'-4	12D	48	
	243'-0	12D	49	
31 TO 33	201'-4	12E	46	4' x 13' x 24'
	213'-10	12E	48	
	226'-4	12E	49	
	243'-0	13A	47	
34 TO 36	201'-4	12E	47	4' x 13' x 24'
	213'-10	12E	49	
	226'-4	12E	50	
	243'-0	13A	49	
37 TO 40	201'-4	12F	49	4' x 15' x 24'
	213'-10	12F	50	
	226'-4	13B	50	
	243'-0	14A	48	

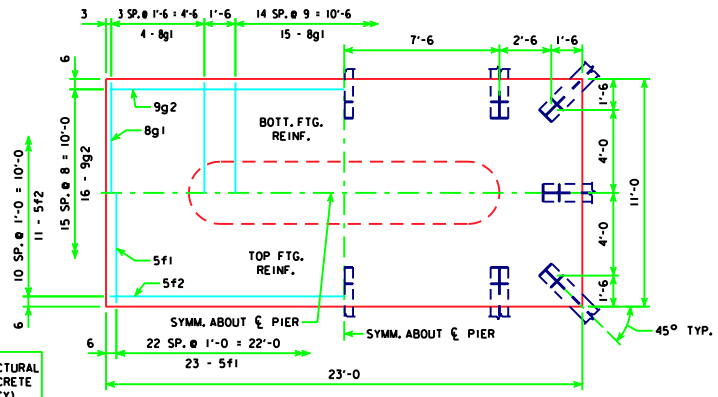

4'-0 x 11'-0 x 23'-0 FOR 12D

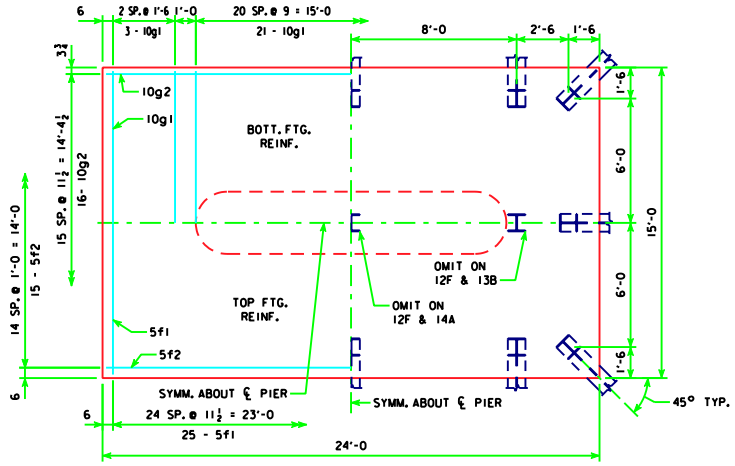

4'-0 x 15'-0 x 24'-0 FOR 12F, 13B & 14A

NOTE:
SEE SHEET H24-62-06 FOR FOOTING NOTES.

FOOTING SIZE	REINFORCING STEEL (ONE FOOTING) BAR	NO., SIZE & SPACING	LENGTH	WEIGHT (LB.)	TOTAL WEIGHT (LB.)	STRUCTURAL CONCRETE (CY)
4' x 10' x 23'	d2	36 - #10 AS SHOWN	10'-6	1627	3614	34.1
	f1	23 - #5 @ 1'-0	9'-8	232		
	f2	10 - #5 @ 1'-0	22'-8	236		
	g1	23 - #8 AS SHOWN	9'-8	594		
	g2	12 - #9 @ 0'-10	22'-8	925		
4' x 11' x 23'	d2	36 - #10 AS SHOWN	10'-6	1627	4031	37.5
	f1	23 - #5 @ 1'-0	10'-8	256		
	f2	11 - #5 @ 1'-0	22'-8	260		
	g1	23 - #8 AS SHOWN	10'-8	655		
	g2	16 - #9 @ 0'-8	22'-8	1233		
4' x 13' x 24'	d2	36 - #10 AS SHOWN	10'-6	1627	4913	46.2
	f1	24 - #5 @ 1'-0	12'-8	317		
	f2	13 - #5 @ 1'-0	23'-8	321		
	g1	26 - #9 AS SHOWN	12'-8	1120		
	g2	15 - #10 @ 0'-10½	23'-8	1528		
4' x 15' x 24'	d2	36 - #10 AS SHOWN	10'-6	1627	5712	53.3
	f1	25 - #5 @ 0'-11½	14'-8	382		
	f2	15 - #5 @ 1'-0	23'-8	370		
	g1	27 - #10 AS SHOWN	14'-8	1704		
	g2	16 - #10 @ 0'-11½	23'-8	1629		

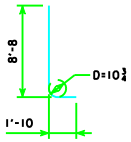

d2

NOTE: D = PIN DIAMETER.
DIMENSIONS ARE OUT TO OUT.

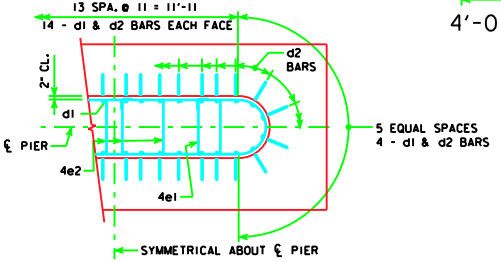

d2 BAR LAYOUT
(SEE SECTION A-A ON SHEET H24-61-06.)

LATEST REVISION DATE

APPROVED BY BRIDGE ENGINEER

Iowa Department of Transportation
Highway Division

STANDARD DESIGN STANDARD FOR THREE SPAN BRIDGE
PRETENSIONED PRESTRESSED
CONCRETE BEAM BRIDGES
HL93 SUPERSTRUCTURE DECEMBER 2006 HS25 SUBSTRUCTURE

TEE PIER - STEEL PILE FOOTINGS, H=25' TO 40'
45° SKEW

H24-63-06