CONTRACTION JOINTS

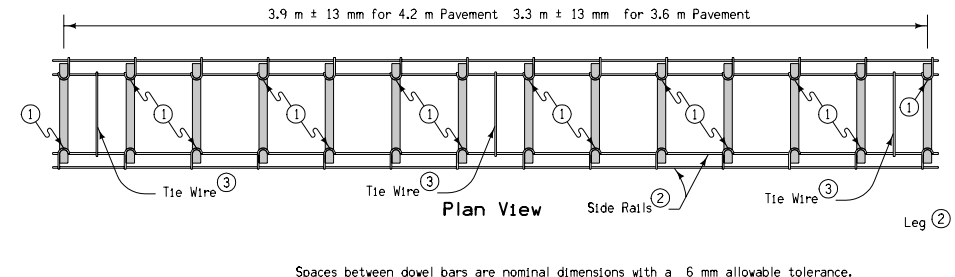

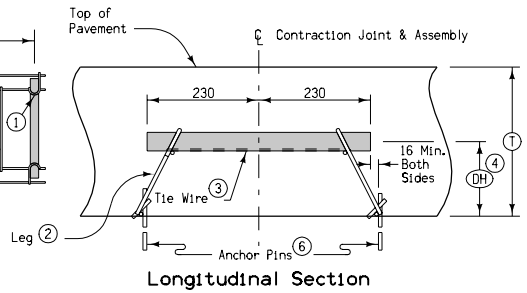

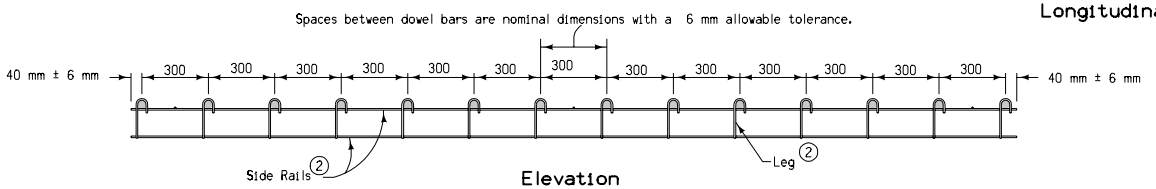

Dowel bars shall be 460 mm long with a tolerance of ± 3 mm. The centerline of individual dowels shall be parallel to the other dowels in the assembly within ± 3 mm.

Wire sizes shown are the minimum required. Wires shall have a minimum tensile strength of 345 MPa.

1. Weld alternately throughout.
2. #1/0 gauge (8 mm diameter) wire.
3. #10 gauge (4 mm diameter) wire, welded or friction fit to upper side rail, both sides.
4. Measured from the centerline of dowel bar to bottom of lower side rail +5 mm.
5. Clip and remove center portion of tie during field assembly.
6. Per lane width, a minimum of (8) anchor pins evenly spaced (4 per side), to prevent movement of assembly during construction. Assemblies placed on pavement or PCC base shall be anchored with devices approved by the Engineer.
7. 6 mm diameter wire.

EXPANSION JOINTS

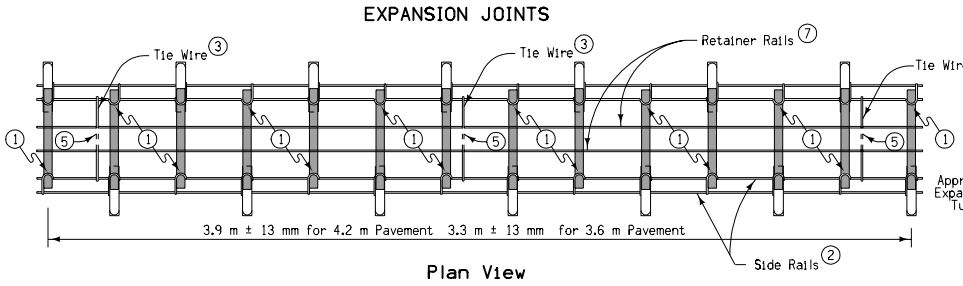

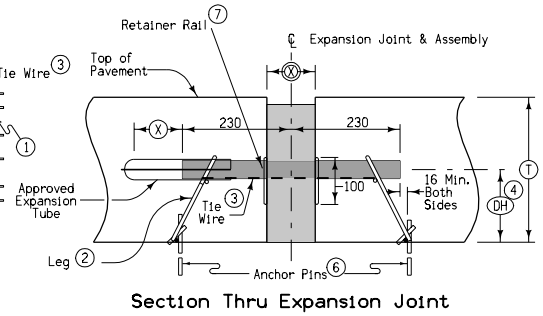

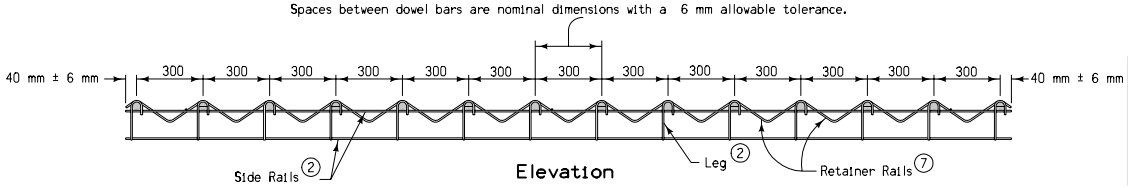

DOWEL HEIGHT AND DIAMETER		
T	DH 4	Diameter
180-190 mm	90 mm	19 mm
200-240 mm	110 mm	31 mm
250-290 mm	135 mm	38 mm
300-330 mm	160 mm	38 mm

JOINT OPENING AND EXPANSION TUBE EXTENSION		
Joint Type	X	Minimum Tube Length
"ED"	25 mm	150 mm
"EE"	50 mm	175 mm
"EF"	100 mm	230 mm

All dimensions given in millimeters unless noted.

M

METRIC VERSION

Iowa Department of Transportation
Highway Division

STANDARD ROAD PLAN | **RH-55(1)**

REVISION: Combine with RH-56 and RH-58.

REVISION NO.	NEW
REVISION DATE	04-18-06

Deanna Maifield
APPROVED BY DESIGN METHODS ENGINEER

DOWEL ASSEMBLIES
Sheet 1 of 2