TAPER SECTION DETAILS

Estimated quantity of concrete for one taper section is 0.5 cubic meters.

The taper section is not needed if an attenuator is used.

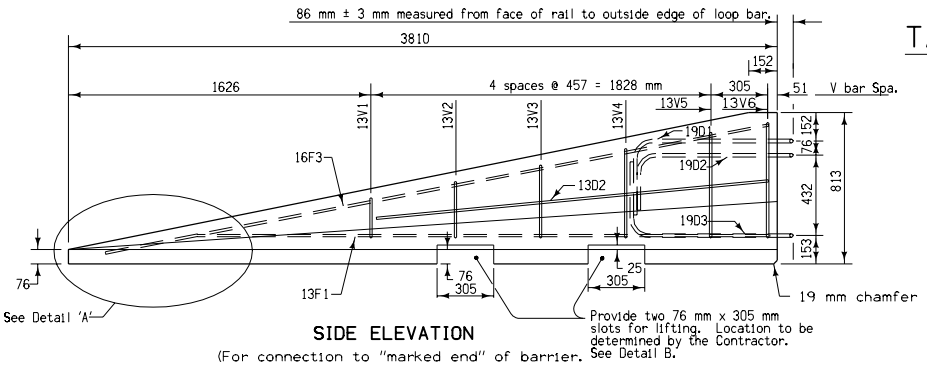

SIDE ELEVATION

(For connection to "marked end" of barrier. Invert loop bars for other end.)

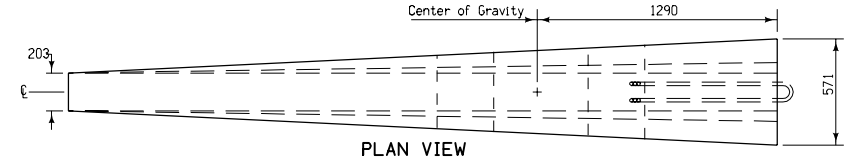

PLAN VIEW

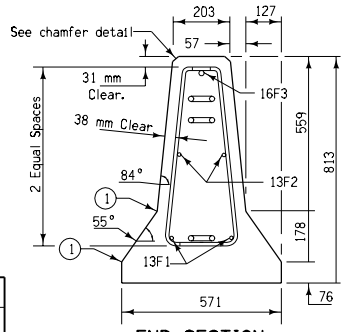

END SECTION

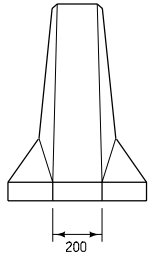

FRONT ELEVATION

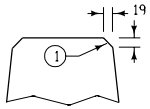

CHAMFER DETAIL

Per 3810 mm Barrier Taper Section

REINFORCING A615M Gr. 420					
Bar	Bar Size	Shape	No. of Bars	Length mm	Weight kg
13V1	13	[	2	584	1.2
13V2	13	[	2	660	1.3
13V3	13	[	2	762	1.5
13V4	13	[	2	838	1.7
13V5	13	[	2	965	1.9
13V6	13	[	2	1016	2.0
13F1	13	—	2	3658	7.3
13F2	13	—	2	2286	4.5
13F3	16	—	1	3581	5.6
LOOP ASSEMBLY					
19D1	19	⌐	1	2565	5.7
19D2	19	⌐	1	2311	5.2
19D3	19	⌐	1	2591	5.8

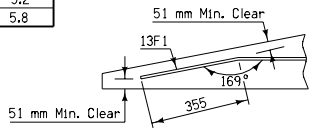

DETAIL 'A'
BENT BAR DETAIL

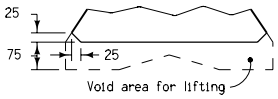

DETAIL 'B'
LIFTING SLOT DETAIL

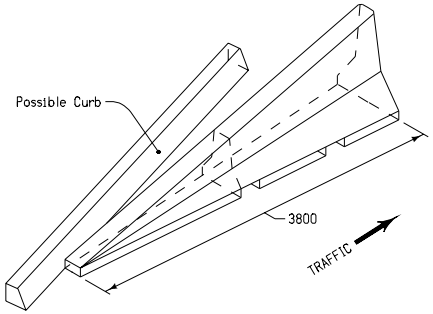

PERSPECTIVE VIEW

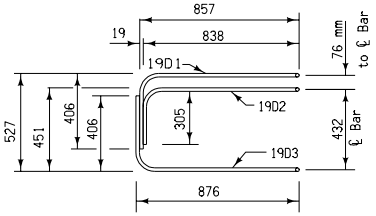

Elevation

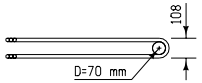

Plan

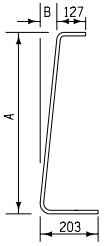

13V bars
2 at each size required for stirrup assembly

Bar	A	B
V1	254	25
V2	330	32
V3	432	41
V4	508	48
V5	622	60
V6	686	70

LOOP BAR ASSEMBLY
(Left Barrier Connection shown, invert for other end)

All dimensions given in millimeters unless noted.

M

METRIC VERSION

Iowa Department of Transportation
Highway Division

STANDARD ROAD PLAN **RE-71(4)**

REVISION: NEW

REVISION NO.	REVISION DATE
NEW	04-18-06

Deanna Maifield
APPROVED BY DESIGN METHODS ENGINEER

TEMPORARY BARRIER RAIL
(PRECAST CONCRETE)
(Sheet 4 of 4)