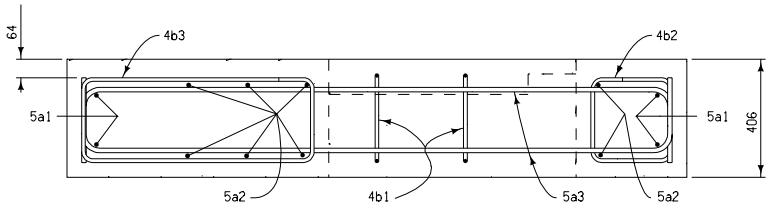

SECTION G-G

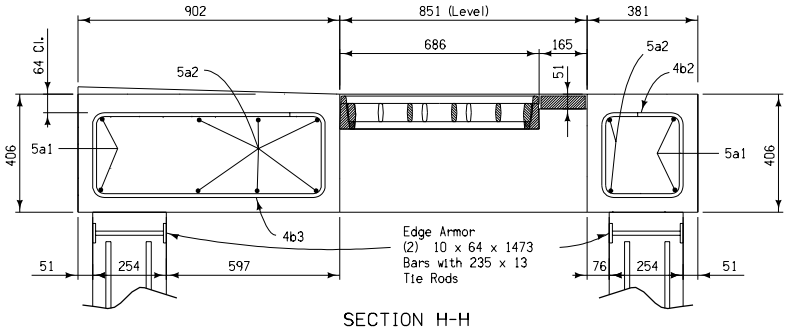

SECTION H-H

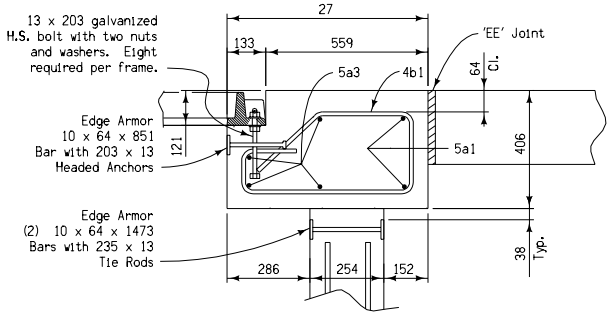

SECTION J-J

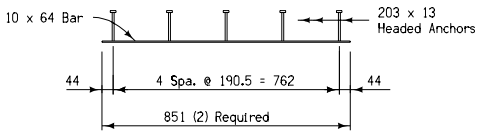

FRAME RING EDGE ARMOR DETAIL

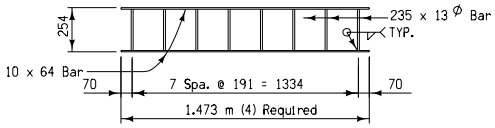

WALL EDGE ARMOR DETAIL

All edge armor steel to be ASTM A36, galvanized after fabrication.

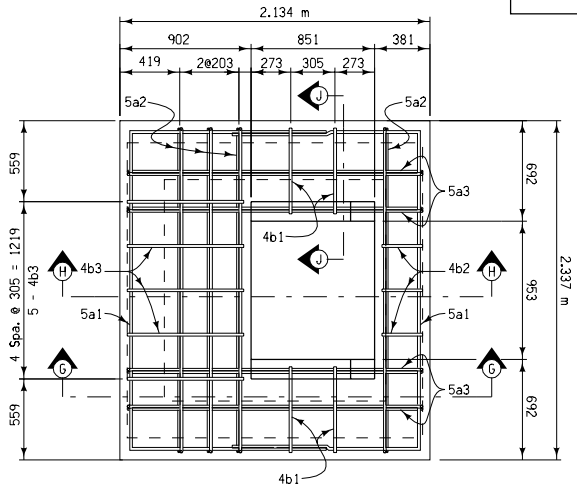

LID PLAN

BILL OF REINFORCING STEEL					
ONE GRATE INTAKE LID - EPOXY COATED					
BAR	LOCATION	SHAPE	NO.	LENGTH	MASS
5a1	Lid, Exterior, Edge		4	5004	30.8
5a2	Lid, Interior, Longitudinal		8	2743	34.0
5a3	Lid, Interior, Transverse		8	2540	31.8
4b1	Lid Hoop		4	1803	7.3
4b2	Lid Hoop		3	1397	4.1
4b3	Lid Hoop		5	2438	12.2
EPOXY COATED REINFORCING STEEL - TOTAL					120.2

BENT BAR DETAILS

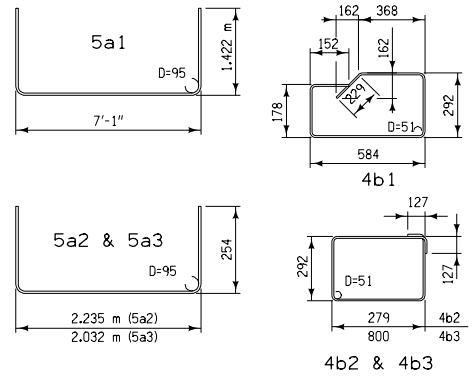

NOTE: ALL DIMENSIONS SHOWN OUT TO OUT. D = PIN DIAMETER

QUANTITY SUMMARY FOR ONE GRATE INTAKE LID	
Concrete	1.68 m^3
Epoxy Coated Reinforcing Steel	120.2 kg

The clear distance from face of concrete to near edge or end of reinforcing bar to be 2" unless otherwise noted.

All dimensions given in millimeters unless noted.

M

METRIC VERSION

Iowa Department of Transportation
Highway Division

STANDARD ROAD PLAN **RA-48A(3)**

REVISION: NEW.

REVISION NO.
NEW
REVISION DATE
04-18-06

Deanna Maifield
APPROVED BY DESIGN METHODS ENGINEER

SINGLE GRATE
BARRIER INTAKE, RECTANGULAR
(Sheet 3 of 4)