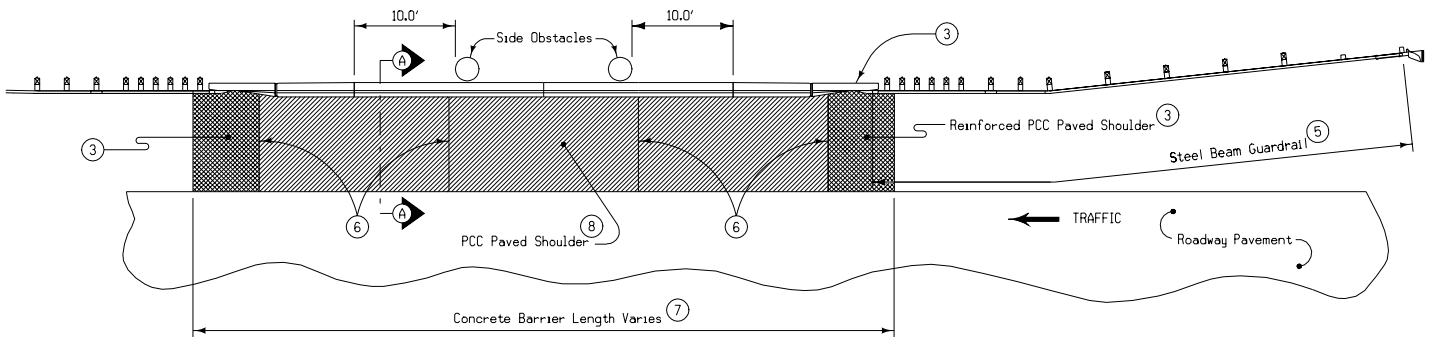

PLAN VIEW

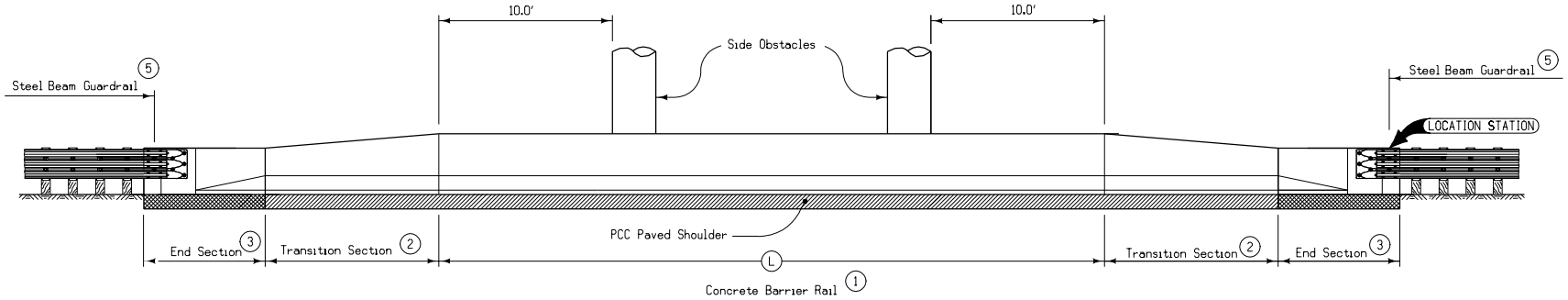

ELEVATION

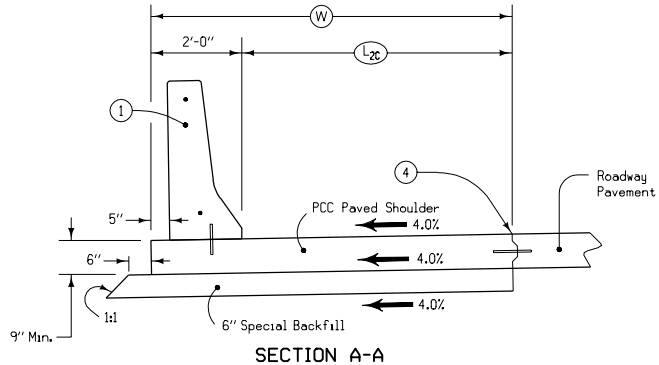

SECTION A-A

GENERAL NOTES:

Details hereon are for a typical installation of Concrete Barrier and Steel Beam Guardrail adjacent to bridge columns and other side obstacles.

Refer to project plans including Tabulation of Steel Beam Guardrail as well as other associated Standard Road Plans for additional requirements.

1. Refer to Standard Road Plan RE-44C.
2. Refer to Standard Road Plan RE-44G.
3. Refer to Standard Road Plan RE-44H.
4. "L-2" or "KT-2" joint. When roadway pavement is existing, use "BT-3" joint. Refer to Standard Road Plan RH-51.
5. Refer to Standard Road Plan RE-65B.
6. "C" Joint; match existing roadway joints when possible.
7. Refer to Tabulation 108-18B.
8. Refer to Tabulation 112-9.

For additional information, see Standard Road Plans and Tabulations as follows: RE-2A, RE-2B, RE-7, RE-12A, RE-12B, RE-47, RE-48B, RE-68, RE-69A, RE-76, RH-41B, RL-14, 107-23, 108-8A, 108-17.

Iowa Department of Transportation
Highway Division

STANDARD ROAD PLAN | **RE-74B**

REVISION: Update number of FLEAT posts.	REVISION NO. 4
William J. Stein APPROVED BY DESIGN METHODS ENGINEER	REVISION DATE 04-30-02

CONCRETE BARRIER AND GUARDRAIL INSTALLATION
(SIDE OBSTACLE, TWO-WAY PROTECTION)