COLOR SPECIFICATIONS:
Background for M1-6A & M1-4 shall be smooth silver reflective sheeting.
Numerals, letters, and border shall be solid black.

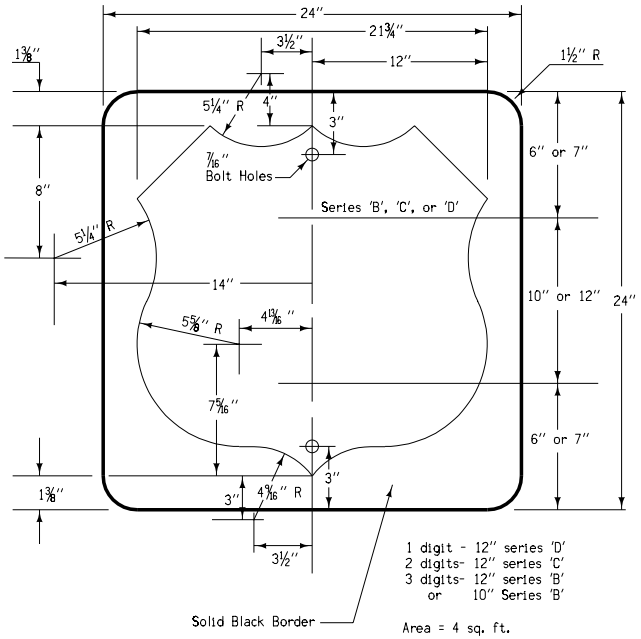

M1-4

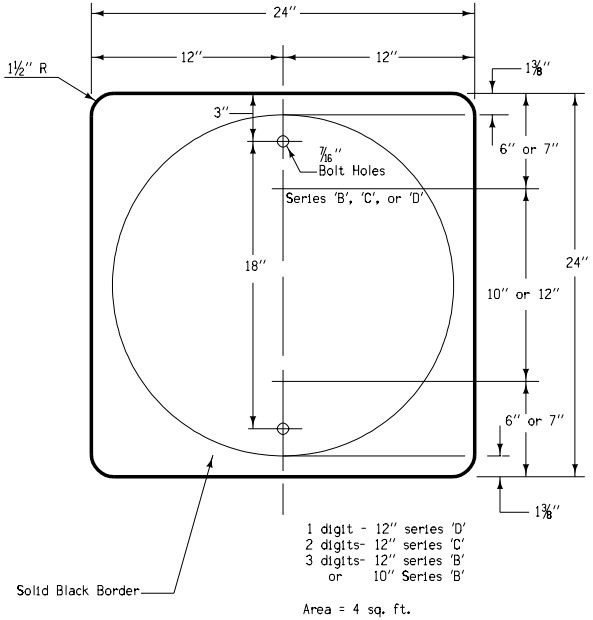

M1-6A

Iowa Department of Transportation
Highway Division

STANDARD ROAD PLAN | **RD-41**

REVISION: NEW	REVISION NO. NEW
William J. Stein APPROVED BY DESIGN-METHODS ENGINEER	REVISION DATE 04-15-03

TYPE 'A' U.S. & STATE ROUTE MARKERS
(INDEPENDENT USE)