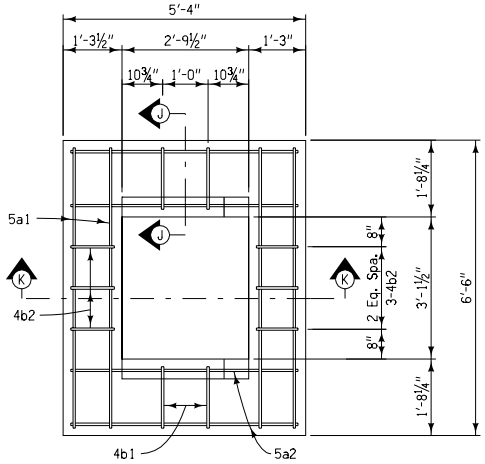

LID PLAN (DEEP)

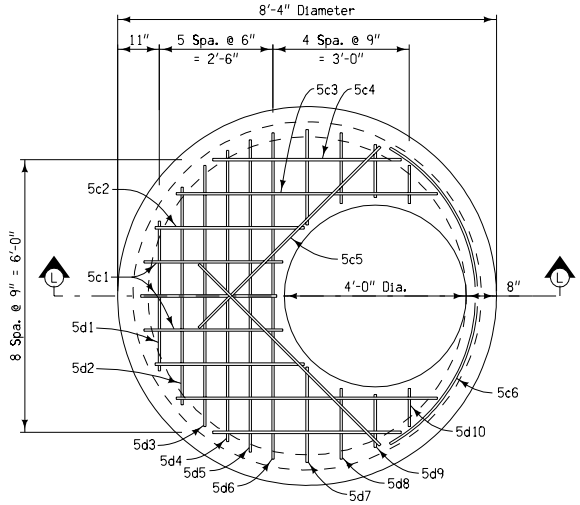

SECTION D-D (DEEP)
INTERMEDIATE LID

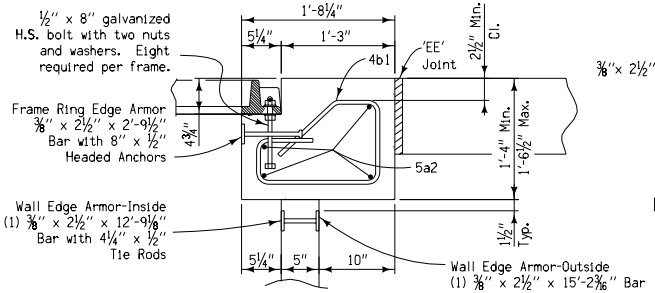

SECTION J-J

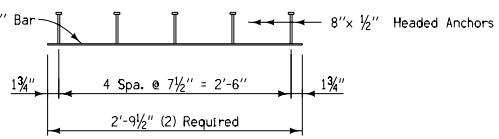

FRAME RING EDGE ARMOR DETAIL

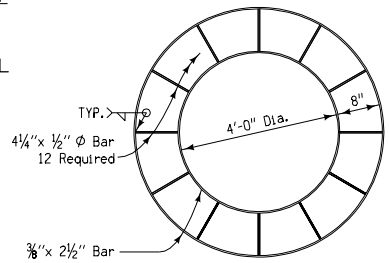

WALL EDGE ARMOR DETAIL (DEEP)

All edge armor steel to be ASTM A36, galvanized after fabrication.

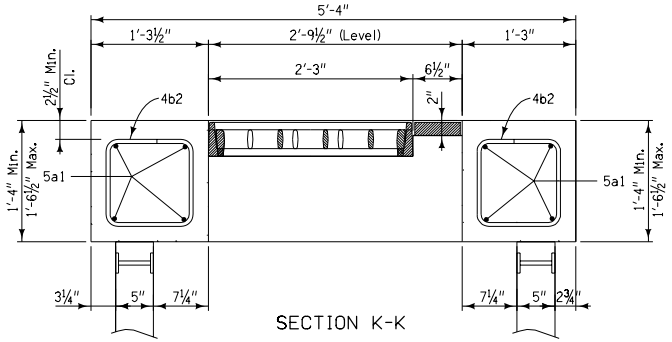

SECTION K-K

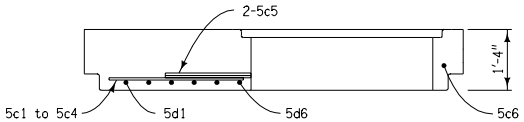

SECTION L-L

BILL OF REINFORCING STEEL

ONE GRATE INTAKE LIDS - EPOXY COATED

BAR	LOCATION	SHAPE	NO.	LENGTH	WEIGHT
5a1	Lid, Longitudinal	—	8	6'-2"	51
5a2	Lid, Transverse	—	8	5'-0"	42
4b1	Lid Hoop		4	4'-9"	13
4b2	Lid Hoop		6	4'-7"	18
5c1	Intermediate Lid	—	3	3'-0"	9
5c2	Intermediate Lid	—	2	3'-3"	7
5c3	Intermediate Lid	—	2	5'-9"	12
5c4	Intermediate Lid	—	2	4'-2"	9
5c5	Intermediate Lid	—	2	5'-8"	12
5c6	Intermediate Lid	⌒	1	8'-2"	9
5d1	Intermediate Lid	—	1	3'-5"	4
5d2	Intermediate Lid	—	1	4'-10"	5
5d3	Intermediate Lid	—	1	5'-9"	6
5d4	Intermediate Lid	—	1	6'-5"	7
5d5	Intermediate Lid	—	1	6'-10"	7
5d6	Intermediate Lid	—	1	7'-2"	7
5d7	Intermediate Lid	—	2	2'-1"	4
5d8	Intermediate Lid	—	2	1'-6"	3
5d9	Intermediate Lid	—	2	1'-2"	2
5d10	Intermediate Lid	—	2	0'-11"	2
	EPOXY COATED REINFORCING STEEL - TOTAL				229

BENT BAR DETAILS

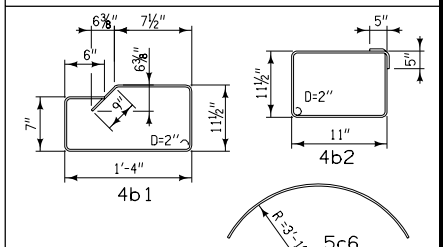

NOTE: ALL DIMENSIONS SHOWN OUT TO OUT. D = PIN DIAMETER

QUANTITY SUMMARY FOR ONE GRATE INTAKE LID

Concrete - Lid	1.2	CY
Concrete - Intermediate Lid	2.1	CY
Epoxy Coated Reinforcing Steel	229	LB

Iowa Department of Transportation
Highway Division

STANDARD ROAD PLAN **RA-48B(4)**

REVISION: NEW

REVISION NO. NEW

REVISION DATE 04-18-06

Deanna Maifeldt
APPROVED BY DESIGN METHODS ENGINEER

SINGLE GRATE
BARRIER INTAKE, CIRCULAR

(Sheet 4 of 5)