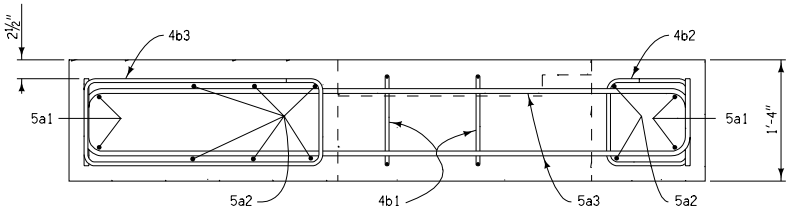

SECTION G-G

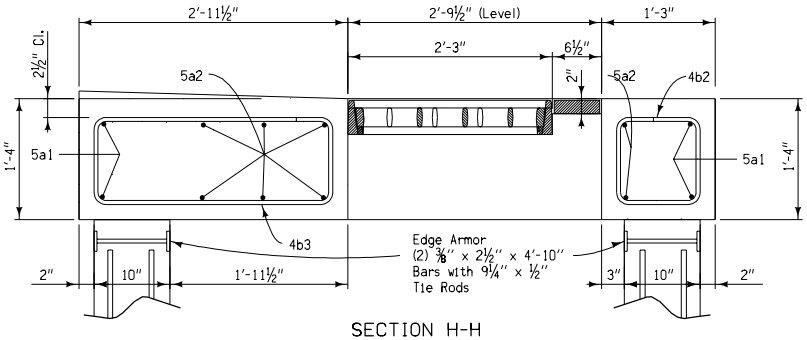

SECTION H-H

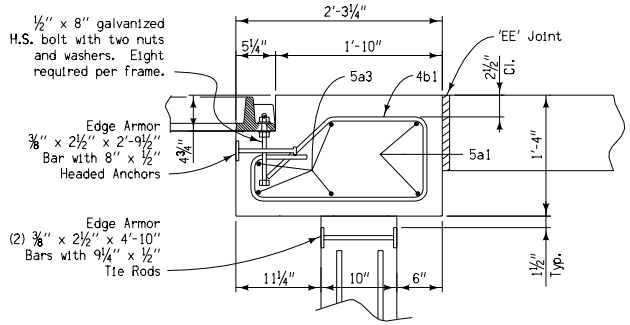

SECTION J-J

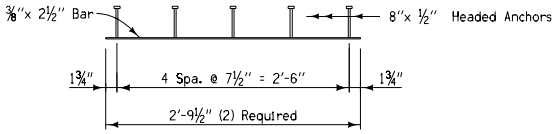

FRAME RING EDGE ARMOR DETAIL

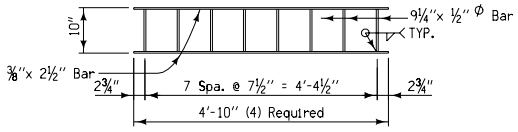

WALL EDGE ARMOR DETAIL

All edge armor steel to be ASTM A36, galvanized after fabrication.

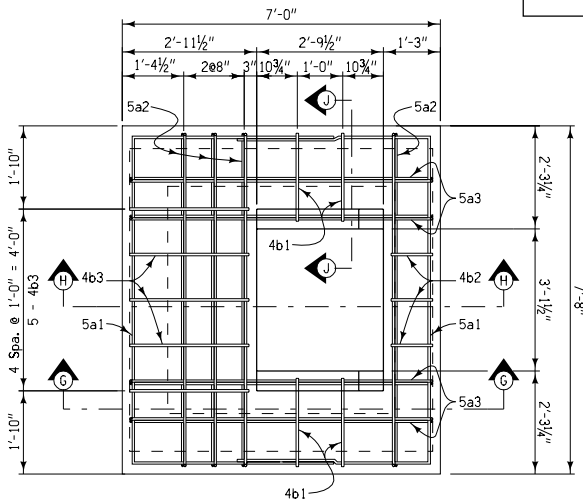

LID PLAN

BILL OF REINFORCING STEEL

ONE GRATE INTAKE LID - EPOXY COATED

BAR	LOCATION	SHAPE	NO.	LENGTH	WEIGHT (lb.)
5a1	Lid, Exterior, Edge		4	16'-5	68
5a2	Lid, Interior, Longitudinal		8	9'-0	75
5a3	Lid, Interior, Transverse		8	8'-4	70
4b1	Lid Hoop		4	5'-11	16
4b2	Lid Hoop		3	4'-7	9
4b3	Lid Hoop		5	8'-0	27
	EPOXY COATED REINFORCING STEEL - TOTAL				265

BENT BAR DETAILS

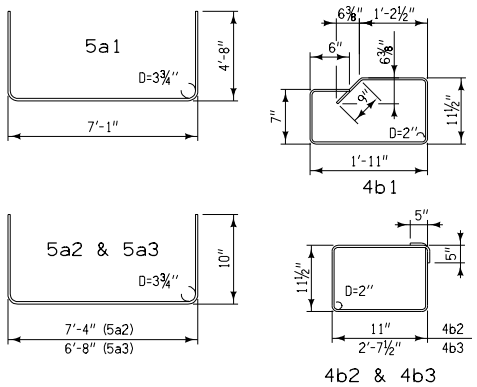

NOTE: ALL DIMENSIONS SHOWN OUT TO OUT. D = PIN DIAMETER

QUANTITY SUMMARY FOR ONE GRATE INTAKE LID

Concrete	2.2 CY
Epoxy Coated Reinforcing Steel	265 LB

The clear distance from face of concrete to near edge or end of reinforcing bar to be 2" unless otherwise noted.

Iowa Department of Transportation
Highway Division

STANDARD ROAD PLAN RA-48A(3)

REVISION: NEW

Deanna Maifeldt
APPROVED BY DESIGN METHODS ENGINEER

REVISION NO.	REVISION DATE
NEW	04-18-06

SINGLE GRATE
BARRIER INTAKE, RECTANGULAR
(Sheet 3 of 4)