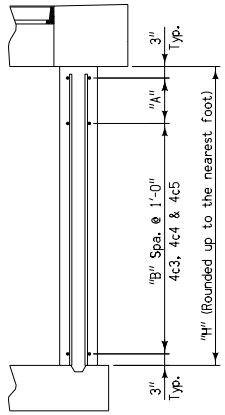

PART SECTION A-A
(Where H = 3' to 7')

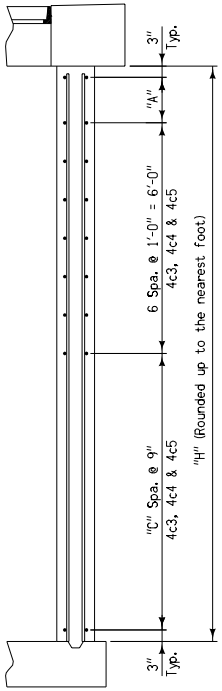

PART SECTION A-A
(Where H = 8' to 15')

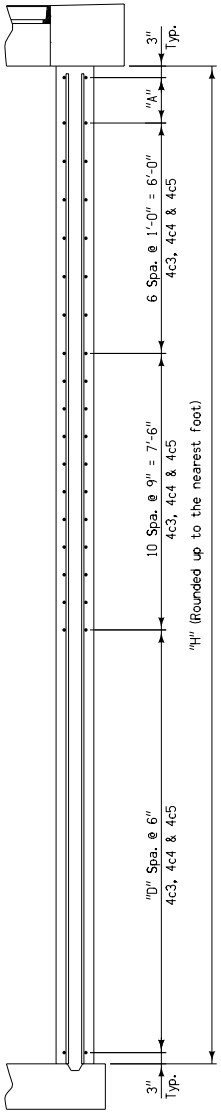

PART SECTION A-A
(Where H = 16' to 28')

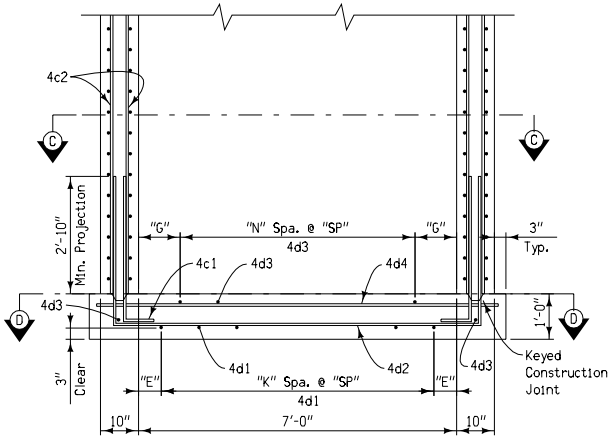

SECTION A-A

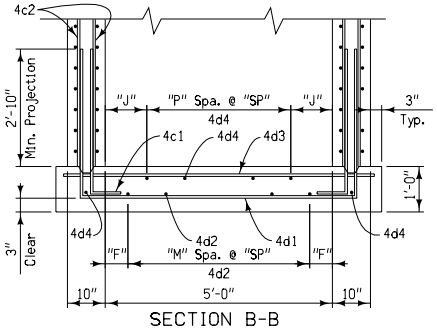

SECTION B-B

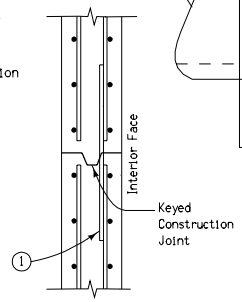

C.I.P. Wall Construction Joint Detail

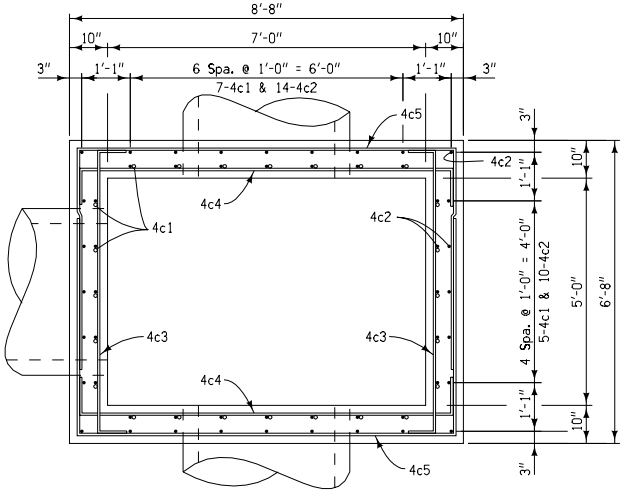

SECTION C-C

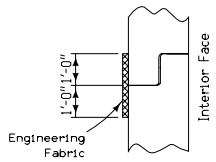

Precast Wall Construction Joint Detail

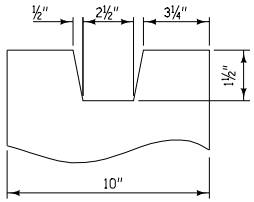

Typical Keyed Construction Joint Detail

The clear distance from face of concrete to near edge or end of reinforcing bar to be 2" unless otherwise noted.

1 One set of 4r1 x 3'-0" dowel bars @ 1'-0" spacing required in wall at any wall joints. 24 4r1 bars required per joint, total weight = 48 lbs.

2 4e1 bar length to be pipe diameter plus 12 inches. 4e1 bar to be placed inside of vertical reinforcing. Main reinforcing bars to be shifted as required for pipe entrance. Field cut bars to clear bottom of base 3" clear from bottom and 2" clear from walls. Eight 4e1 bars required per pipe entrance.

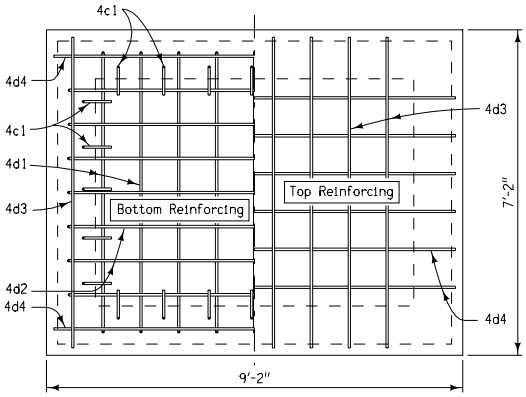

SECTION D-D

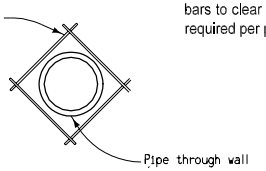

Pipe Reinforcing Detail
To Be Used At All Pipe Entrances 2

Iowa Department of Transportation
Highway Division

STANDARD ROAD PLAN RA-47A(2)

REVISION: NEW.

REVISION NO. NEW

REVISION DATE 04-18-06

Deanna Maifeldt
APPROVED BY DESIGN METHODS ENGINEER

TRIPLE GRATE
BARRIER INTAKE, RECTANGULAR
(Sheet 2 of 4)