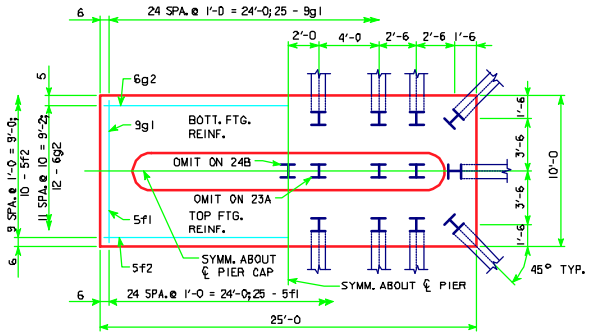

23A 24B

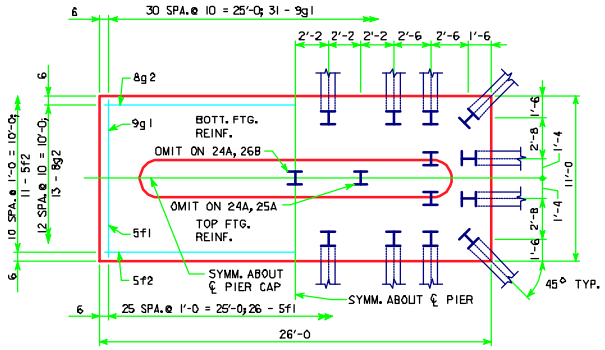

24A 25A 26B

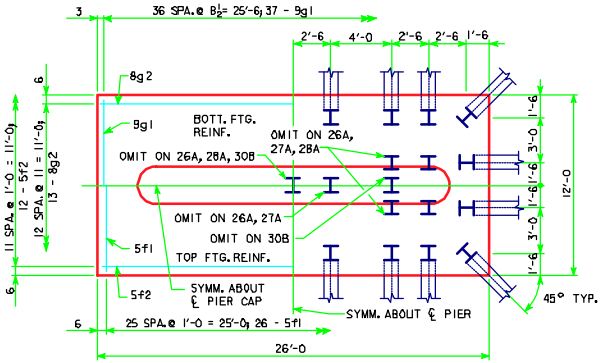

26A 27A 28A 30B

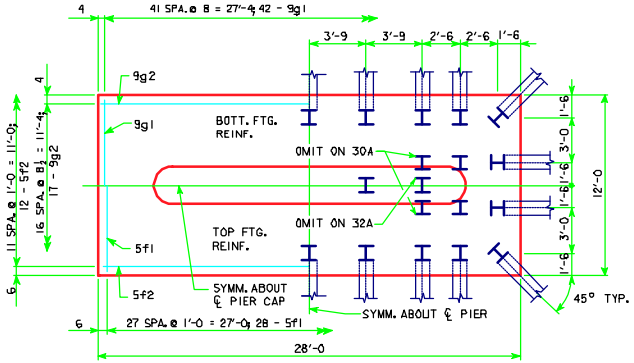

30A 32A

LATEST REVISION DATE

APPROVED BY BRIDGE ENGINEER

Iowa Department of Transportation
Highway Division

STANDARD DESIGN - 40' ROADWAY, 3 SPAN BRIDGES

ROLLED STEEL BEAM BRIDGES

FEBRUARY, 2004

T PIER 10° SKEW
STEEL PILE FOOTINGS
SHEET 3 OF 3

RS40-PR8-04