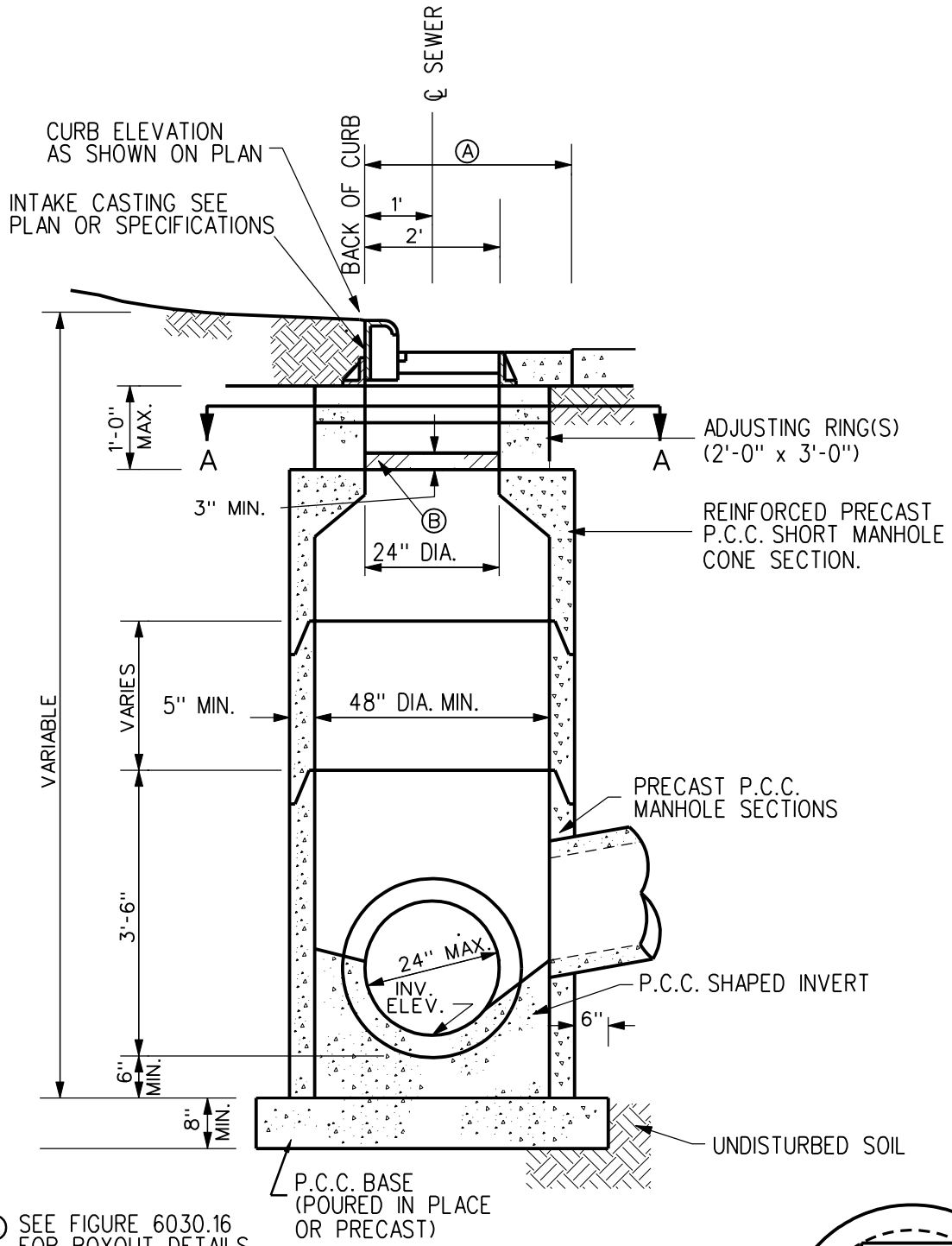

Ⓐ SEE FIGURE 6030.16 FOR BOXOUT DETAILS

Ⓑ CONCRETE OR MORTAR FILLET

SECTION B-B

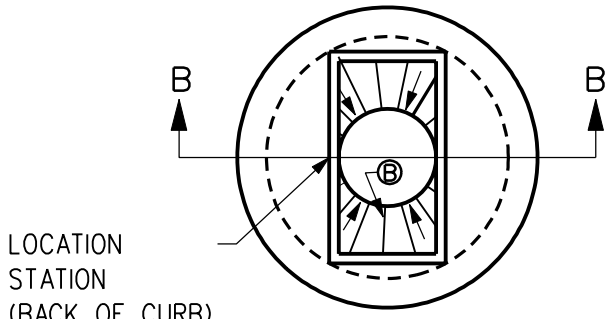

TOP

SECTION A-A

REV.	DATE	BY		
2	10/21/03		SINGLE, TYPE "M-B" INTAKE	FIGURE: 6030.2
DATE: 01-01-98				SHEET 1 OF 1