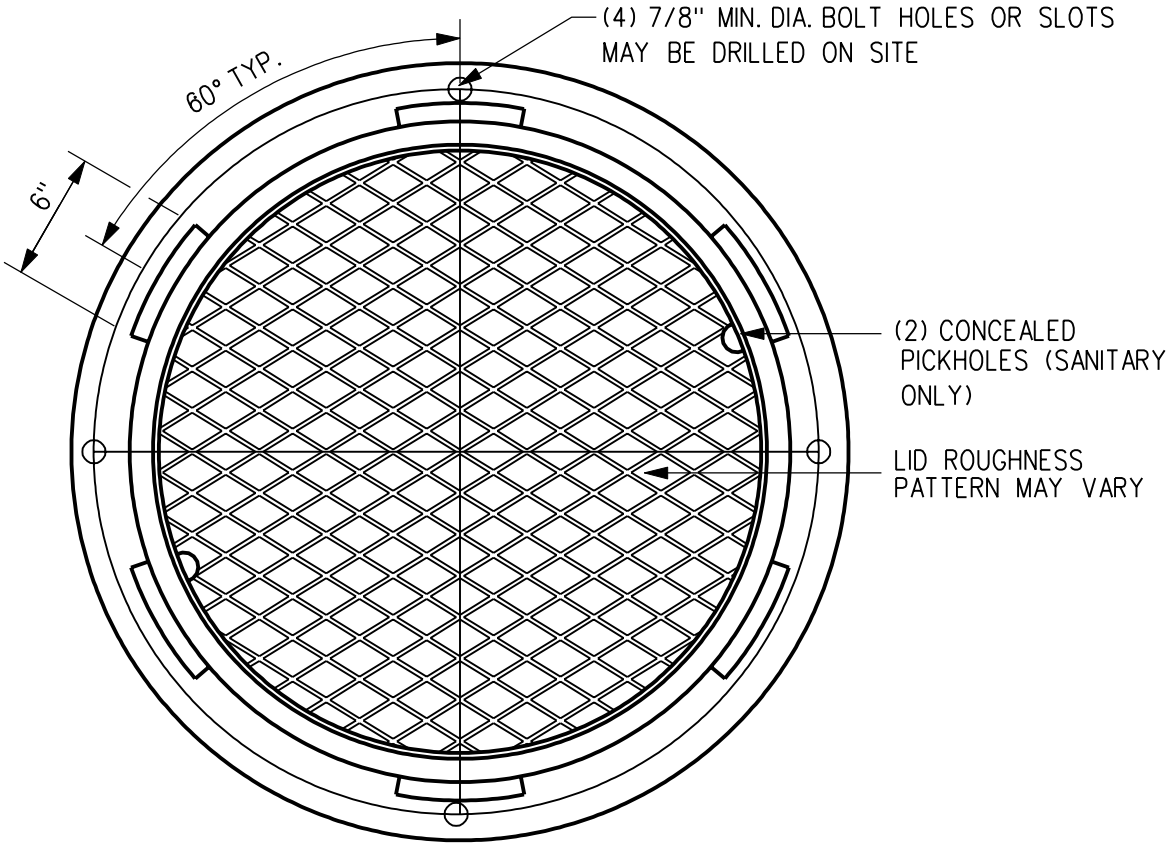


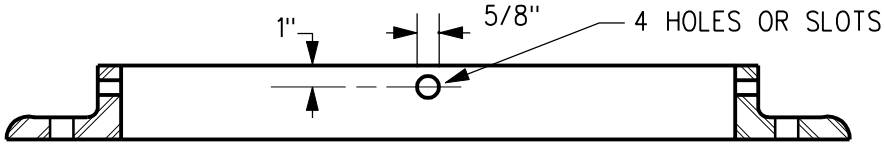


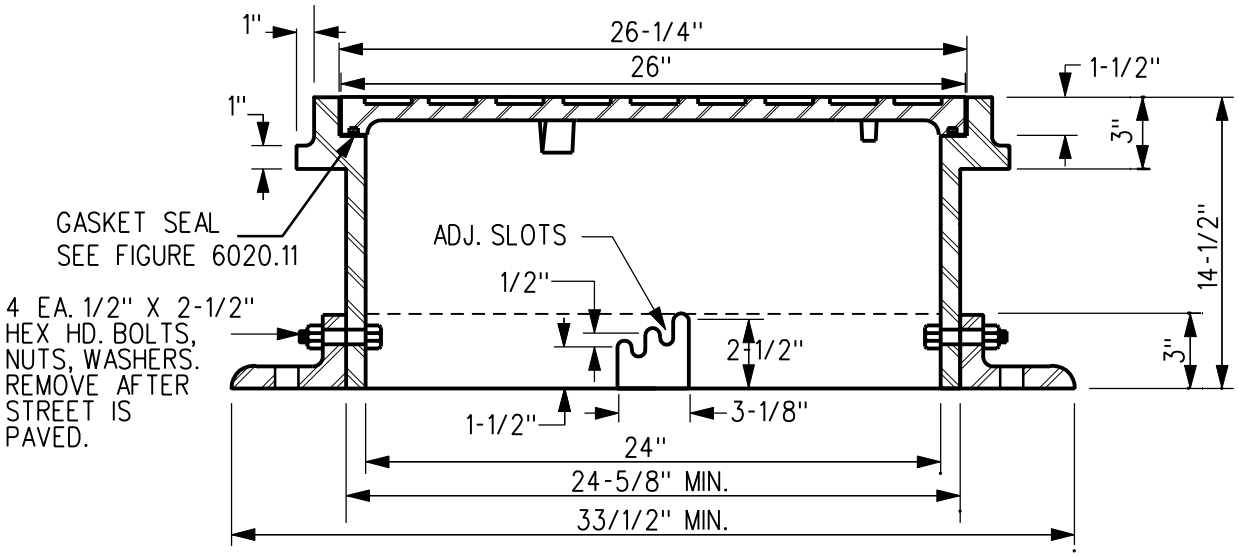


MATERIAL:
CAST GRAY IRON
ASTM A-48 CLASS 35B

| REV. | DATE | BY | | |
|---|---|---|---|---|
| 3 | 10/19/04 | | TYPE "B" RING AND COVER (SANITARY SEWER) | FIGURE: 6020.8 |
| DATE: 01-01-98 | | | | SHEET 1 OF 1 |