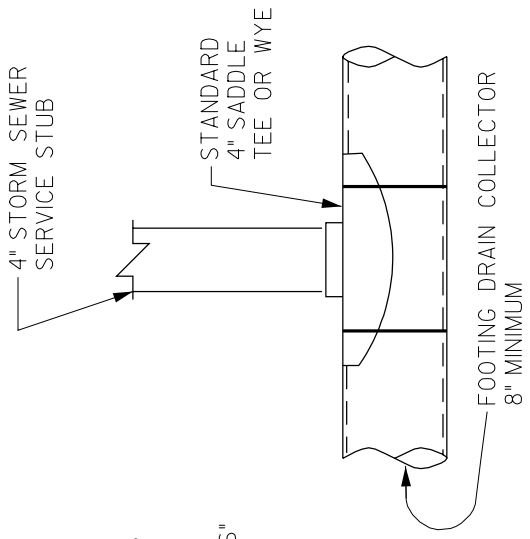

SADDLE CLAMP

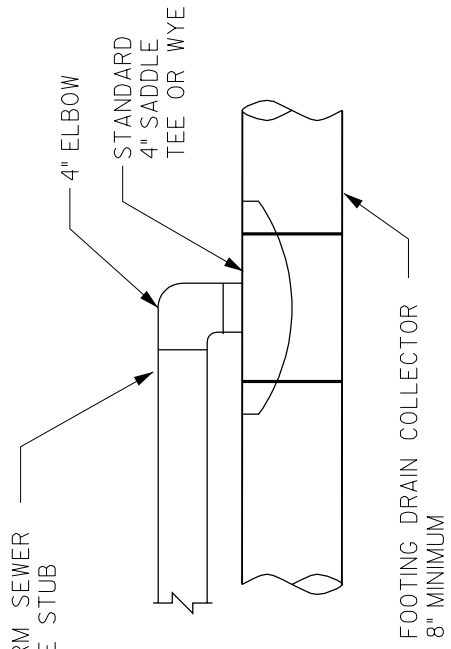

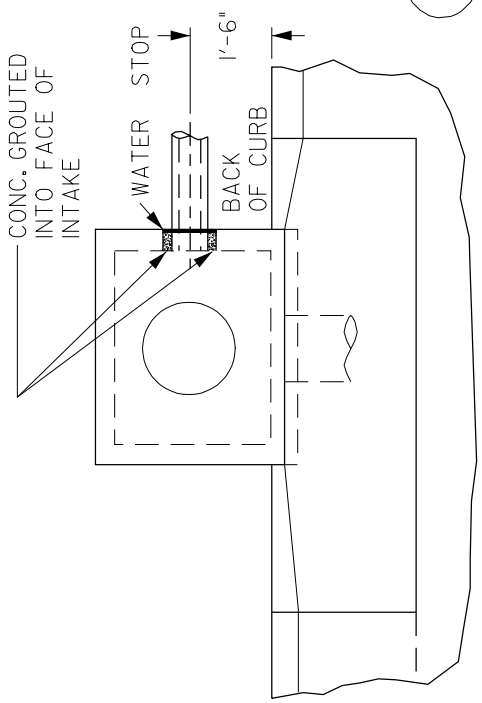

PLAN

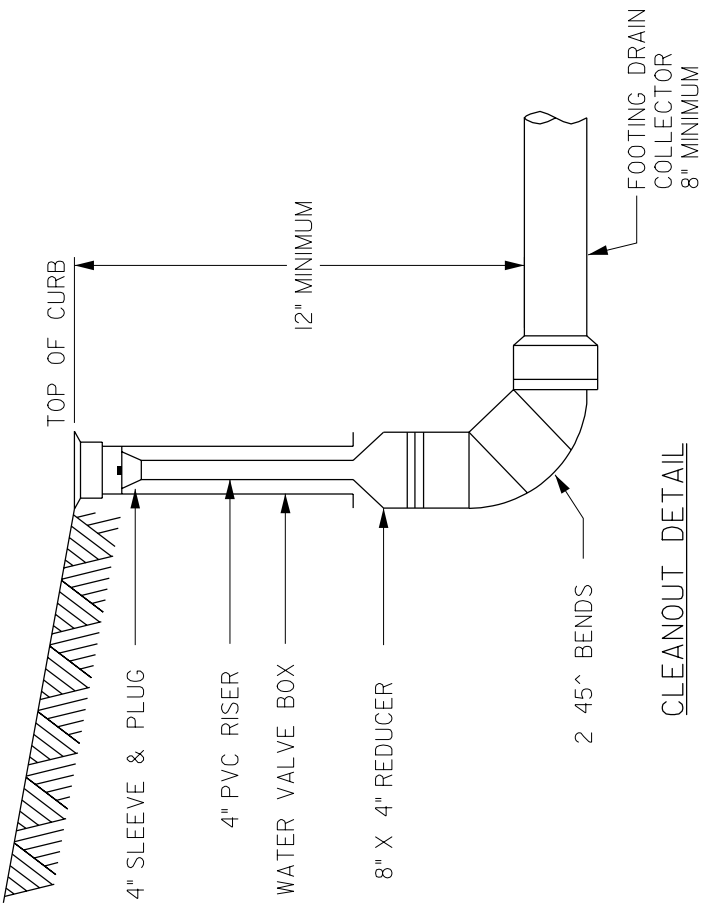

CLEANOUT DETAIL

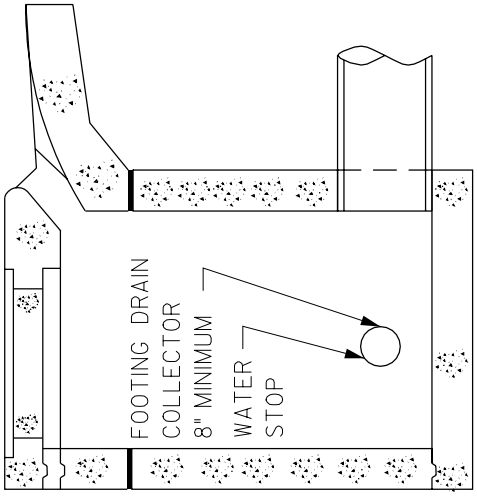

SECTION

REV.	DATE	BY
1	01/25/01	

DATE: 01-01-98

FOOTING DRAIN SEWER COLLECTOR

FIGURE: 4020.11

SHEET 1 OF 1