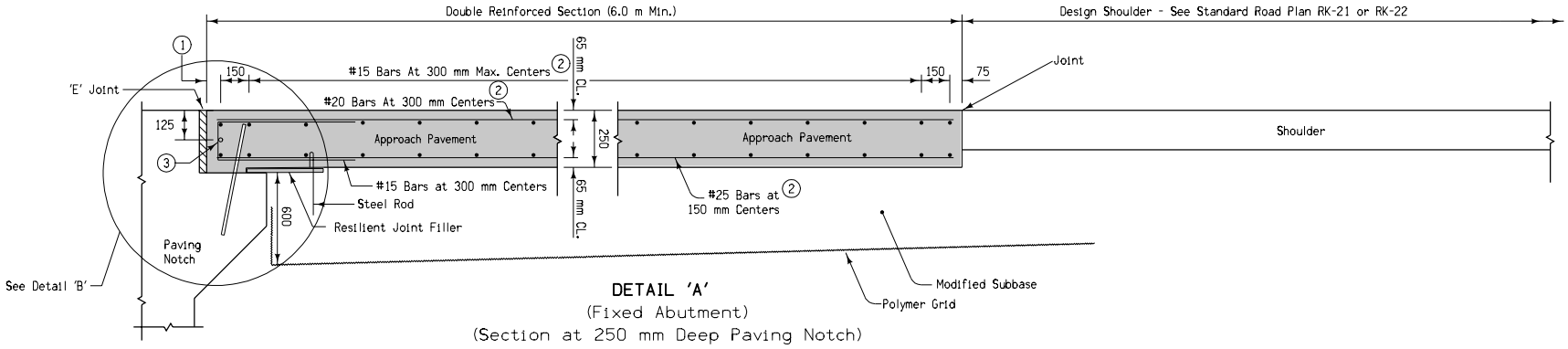

DETAIL 'A'
(Fixed Abutment)
(Section at 250 mm Deep Paving Notch)

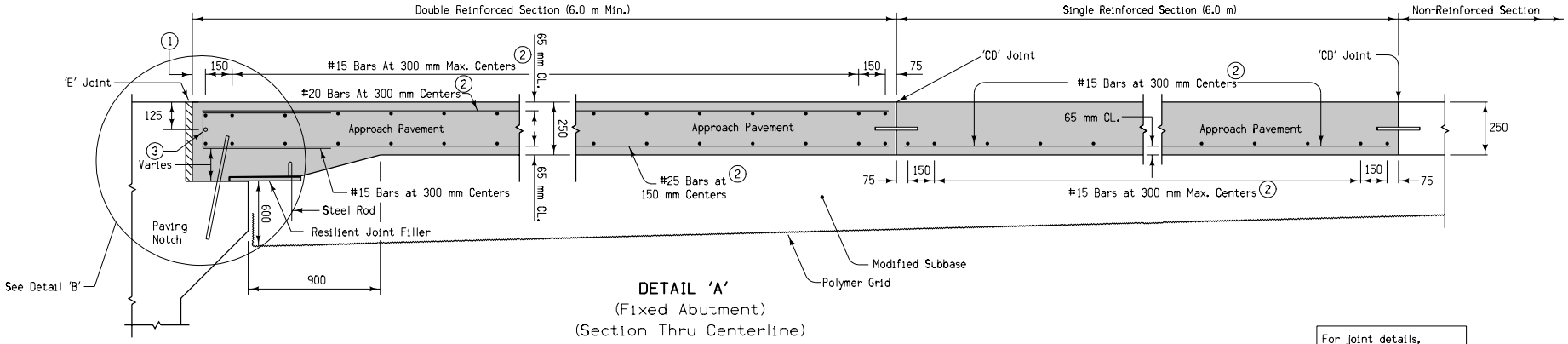

DETAIL 'A'
(Fixed Abutment)
(Section Thru Centerline)

For joint details, see Standard Road Plans RH-50, RH-51, and RH-52.

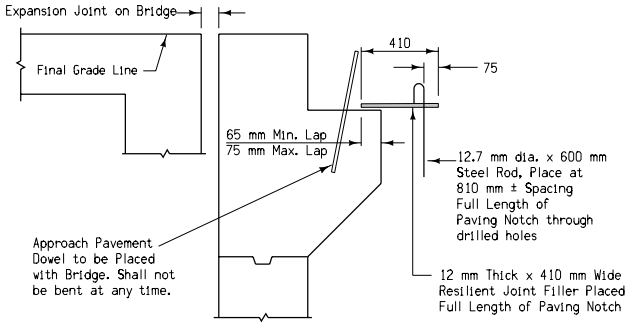

DETAIL 'B'

1. 50 mm min. to 65 mm max. clear to bent bar.
2. Minimum lap length: #15 Bars - 430 mm
   #20 Bars - 700 mm
   #25 Bars - 1170 mm
3. If bridge is skewed, place additional #15 bar parallel to skewed face.

All Transverse Bars are #15.

All dimensions given in millimeters unless noted.

M

METRIC VERSION

Iowa Department of Transportation
Highway Division

STANDARD ROAD PLAN **RK-26(1)**

REVISION: NEW.

REVISION NO.	REVISION DATE
NEW	04-19-05

William J. Stein
APPROVED BY DESIGN METHODS ENGINEER

DOUBLE REINFORCED 250 mm APPROACH WITH VARIABLE DEPTH PAVING NOTCH
(Sheet 1 of 3)