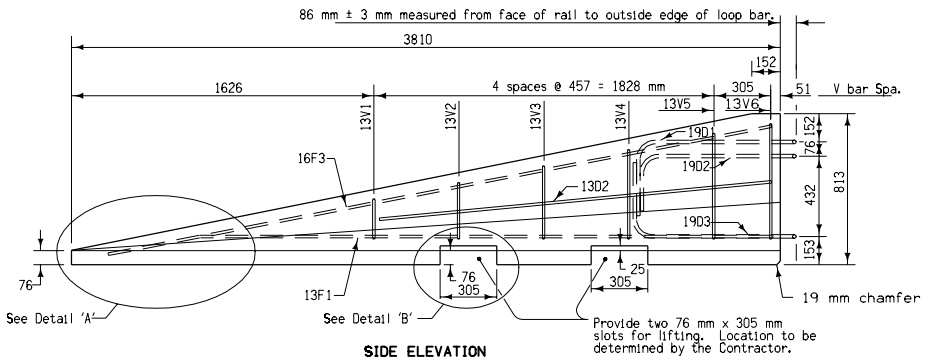


**SIDE ELEVATION**
(For connection to left end of Barrier)

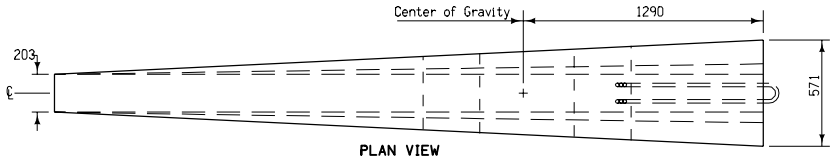


**PLAN VIEW**

| BAR | A | B |
|---|---|---|
| V1 | 254 | 25 |
| V2 | 330 | 32 |
| V3 | 432 | 41 |
| V4 | 508 | 48 |
| V5 | 622 | 60 |
| V6 | 686 | 70 |

GENERAL NOTES:

Details shown hereon are for the construction of a precast temporary concrete barrier rail taper section.

Estimated quantity for one taper section is 0.5 cubic meters of concrete.

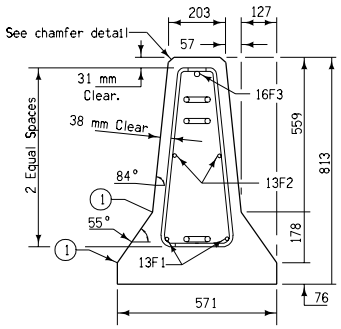


**END SECTION**

① 25 mm radius allowed.

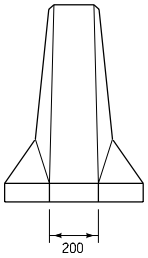


**FRONT ELEVATION**

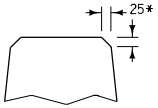


**CHAMFER DETAIL**

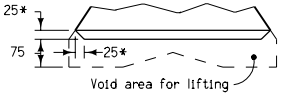


**DETAIL 'B'**
**LIFTING SLOT DETAIL**

* 25 mm Chamfer to prevent spalling

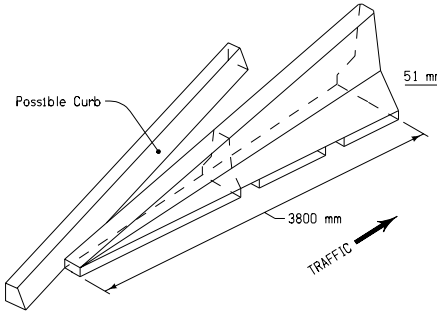


**TYPICAL CONCRETE BARRIER RAIL TAPER SECTION PERSPECTIVE VIEW**

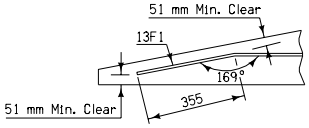


**DETAIL 'A'**
**BENT BAR DETAIL**

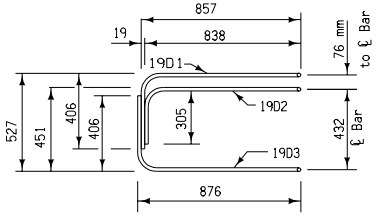


Elevation

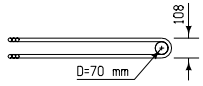


Plan

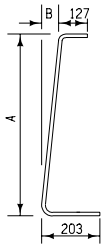


**13V bars**
2 at each size required for stirrup assembly

**LOOP BAR ASSEMBLY**
(Left Barrier Connection shown, invert for other end)

Per 3810 mm Barrier Taper Section

| REINFORCING A615M Gr. 420 | | | | | |
|---|---|---|---|---|---|
| BAR | BAR SIZE | SHAPE | NO. OF BARS | LENGTH MM | WEIGHT KG |
| 13V1 | 13 | [ | 2 | 584 | 1.2 |
| 13V2 | 13 | [ | 2 | 660 | 1.3 |
| 13V3 | 13 | [ | 2 | 762 | 1.5 |
| 13V4 | 13 | [ | 2 | 838 | 1.7 |
| 13V5 | 13 | [ | 2 | 965 | 1.9 |
| 13V6 | 13 | [ | 2 | 1016 | 2.0 |
| 13F1 | 13 | — | 2 | 3658 | 7.3 |
| 13F2 | 13 | — | 2 | 2286 | 4.5 |
| 13F3 | 16 | — | 1 | 3581 | 5.6 |
| LOOP ASSEMBLY | | | | | |
| 19D1 | 19 | ⌐ | 1 | 2565 | 5.7 |
| 19D2 | 19 | ⌐ | 1 | 2311 | 5.2 |
| 19D3 | 19 | ⌐ | 1 | 2591 | 5.8 |

All dimensions given in millimeters unless noted.

NOTE:
Standard Road Plan RE-72 to be used in conjunction with Standard Road Plan RE-71.

M

Iowa Department of Transportation
*Highway Division*

**STANDARD ROAD PLAN** | **RE-72**

REVISION: Change number of loop bars.

REVISION NO. 6

REVISION DATE 04-15-03

William J. Stein
APPROVED BY DESIGN METHODS ENGINEER

METRIC VERSION

F-SHAPE TEMPORARY CONCRETE BARRIER RAIL TAPER SECTION (PRECAST)