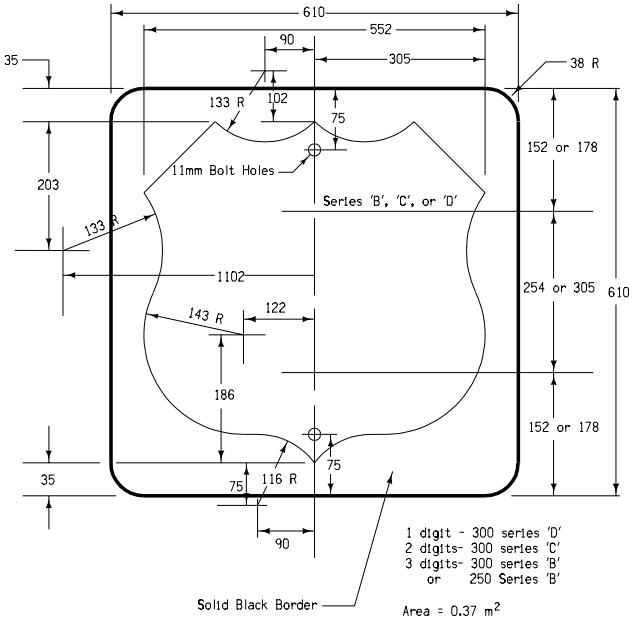

M1-4

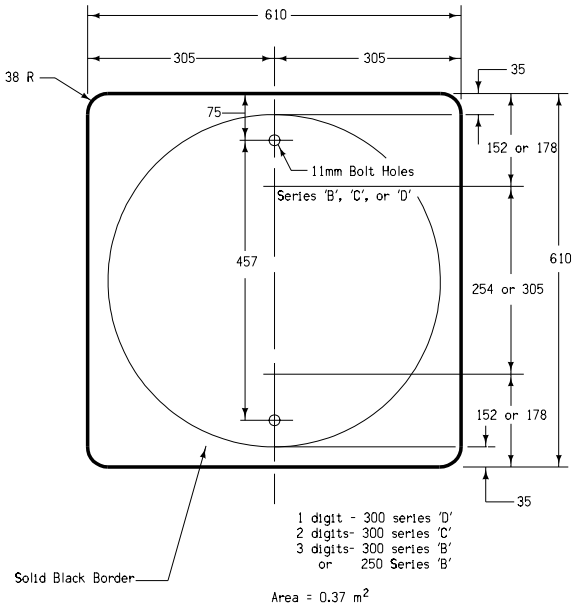

M1-6A

COLOR SPECIFICATIONS:
Background for M1-6A & M1-4 shall be smooth silver reflective sheeting.
Numerals, letters, and border shall be solid black.

All dimensions in millimeters unless noted.

M

METRIC VERSION

Iowa Department of Transportation
Highway Division

STANDARD ROAD PLAN | **RD-41**

REVISION: NEW

REVISION NO.
NEW
REVISION DATE
04-15-03

William J. Stein
APPROVED BY DESIGN METHODS ENGINEER

TYPE 'A' U.S. & STATE ROUTE MARKERS
(INDEPENDENT USE)