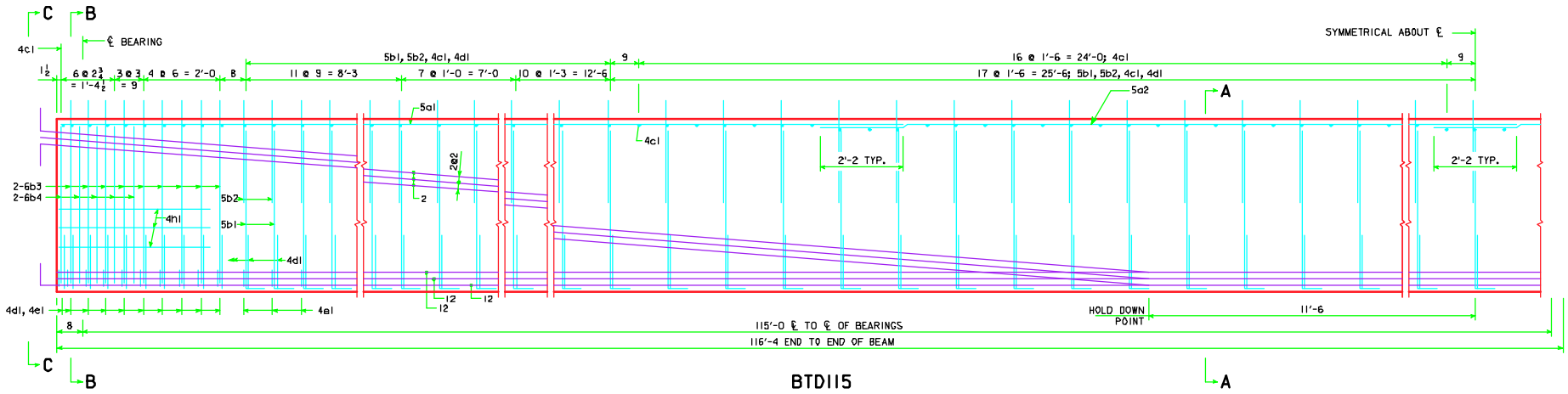

BTD115

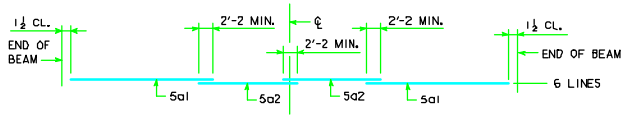

TOP FLANGE LONGITUDINAL BAR LAYOUT

AREA = 748.8 in²
$\bar{y}_b$ = 24.64 in
I = 285,860 in⁴

BEAM SECTION PROPERTIES

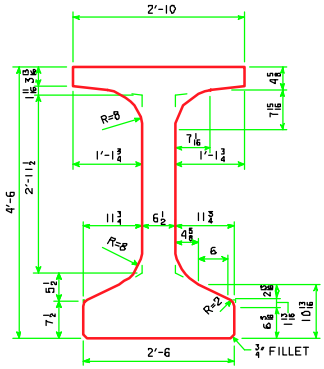

BTD BEAM CROSS SECTION

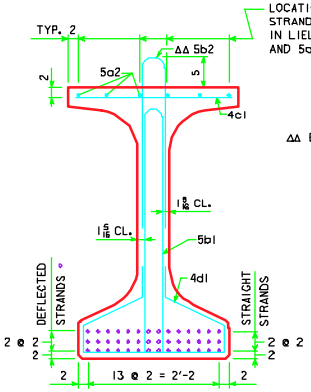

SECTION A-A

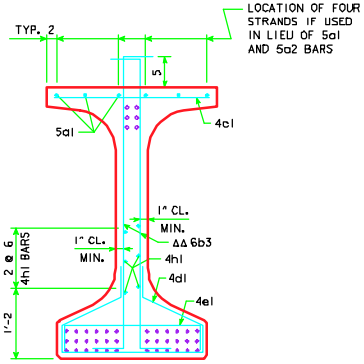

SECTION B-B

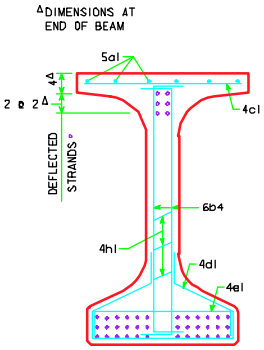

SECTION C-C

LATEST REVISION DATE	APPROVED BY BRIDGE ENGINEER	Iowa Department of Transportation Highway Division
		STANDARD DESIGN - 30' ROADWAY, 2 SPAN BRIDGES
		PRETENSIONED PRESTRESSED BULB TEE CONCRETE BEAM BRIDGES
		115'-0 SPAN — JULY, 2004
		BTD115 BEAM DETAILS — BT30-DB3-04

21-JUL-2004 13:00 ajeffer W:\Highway\Bridge\Standards\Bridges\2SpanPPCB\30Roadway\Signed\BT30DB304.s01