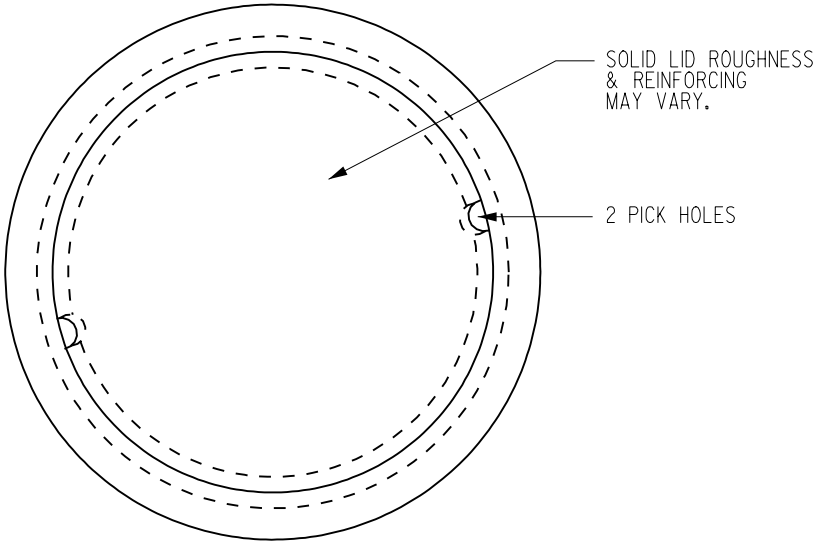

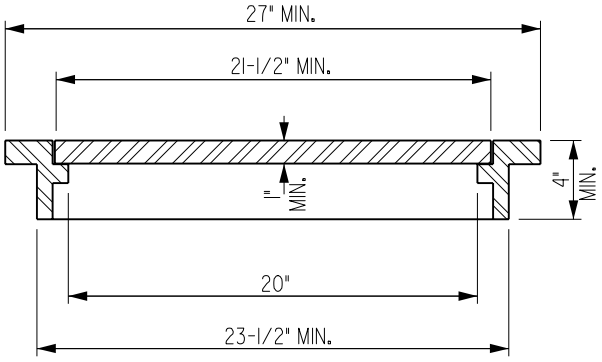

MACHINED BEARING SURFACES

MATERIAL:
CAST GRAY IRON
ASTM A-48 CLASS 35B

REV.	DATE	BY
2	10/2002	
1	01/25/01	

DATE: 03-03-98

TYPE "G" RING AND COVER
(STORM SEWER ONLY)

FIGURE: 6020.19

SHEET 1 OF 1