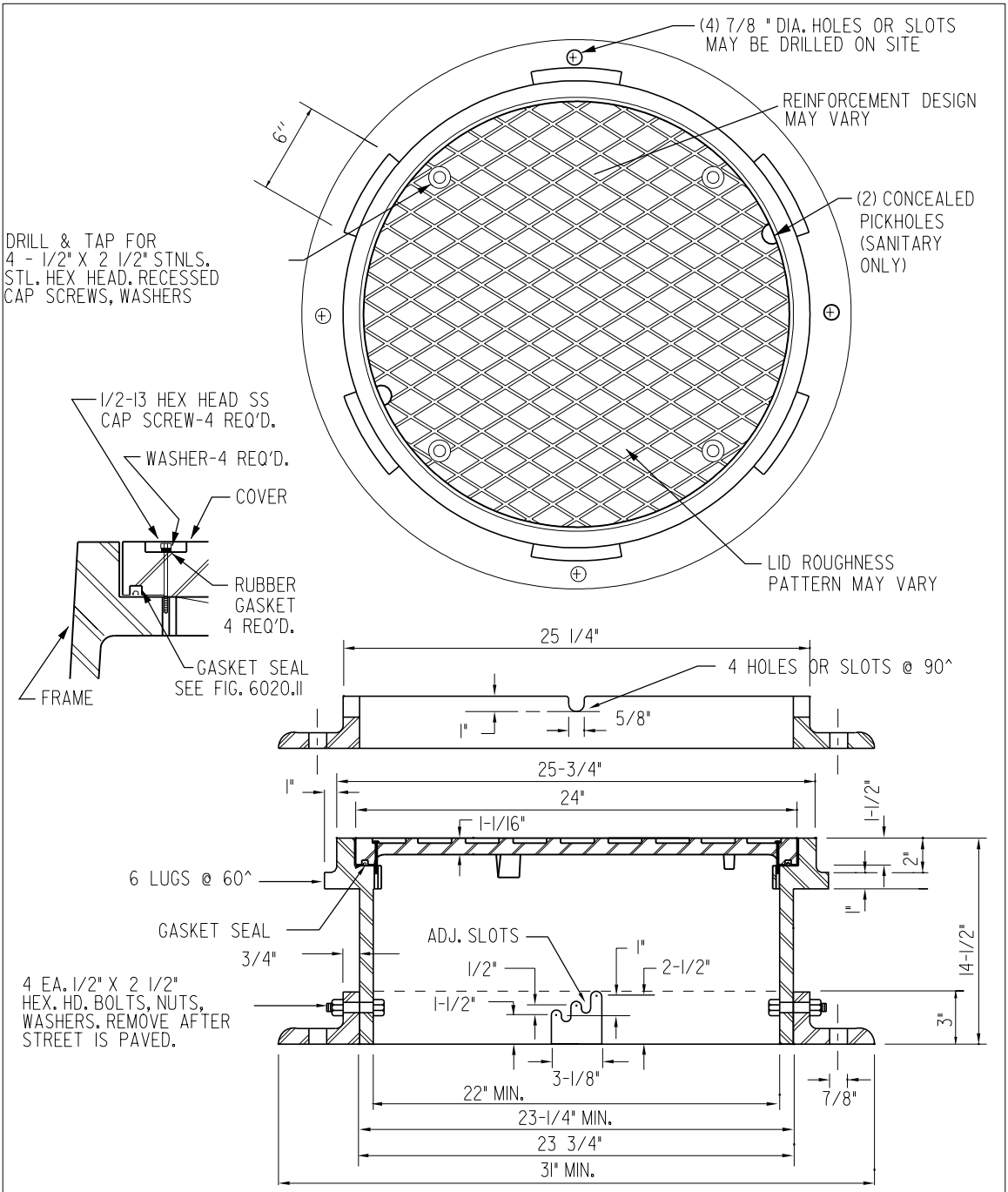

MATERIAL:
CAST GRAY IRON
ASTM A-48 CLASS 35B

REV.	DATE	BY	TYPE "D" RING AND COVER (SANITARY SEWER)	FIGURE: 6020.10
2	10/2002			
1	01/25/01			
DATE: 01-01-98				SHEET 1 OF 1