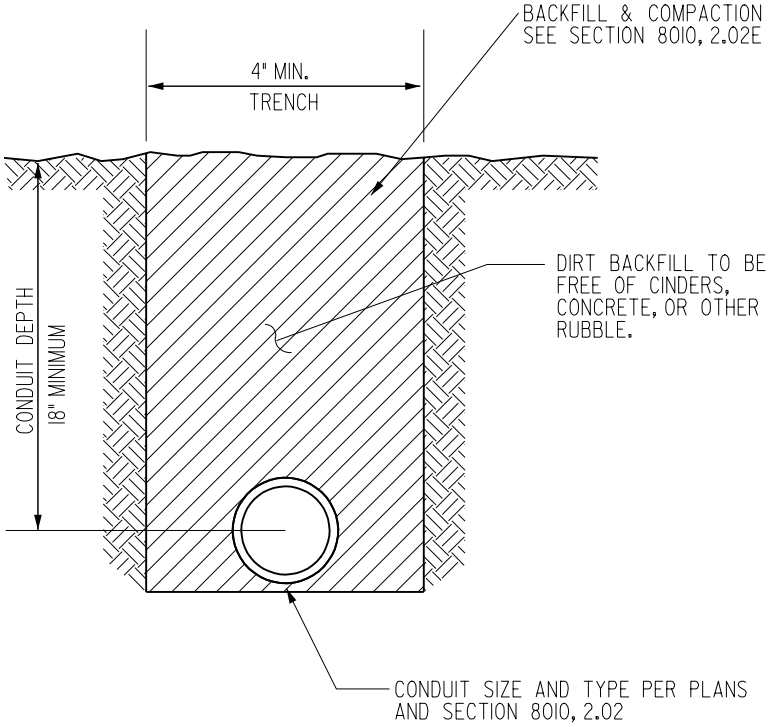

REV.	DATE	BY	CONDUIT IN TRENCH	FIGURE: 8010.3
DATE: 01-01-98				SHEET 1 OF 1