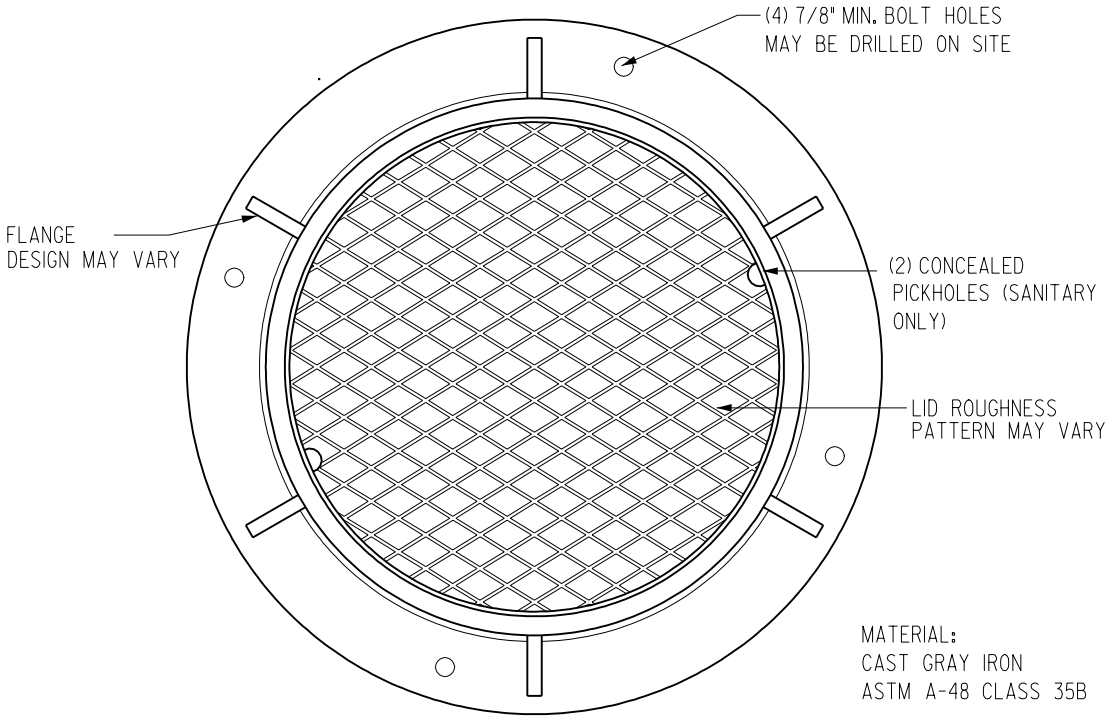

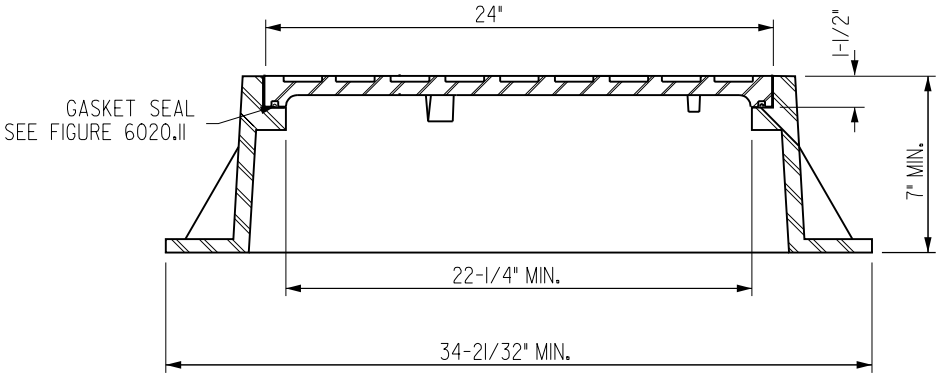

REV.	DATE	BY		
2	10/2002		TYPE "A" RING AND COVER (SANITARY SEWER)	FIGURE: 6020.7
1	01/25/01			
DATE: 01-01-98				SHEET 1 OF 1