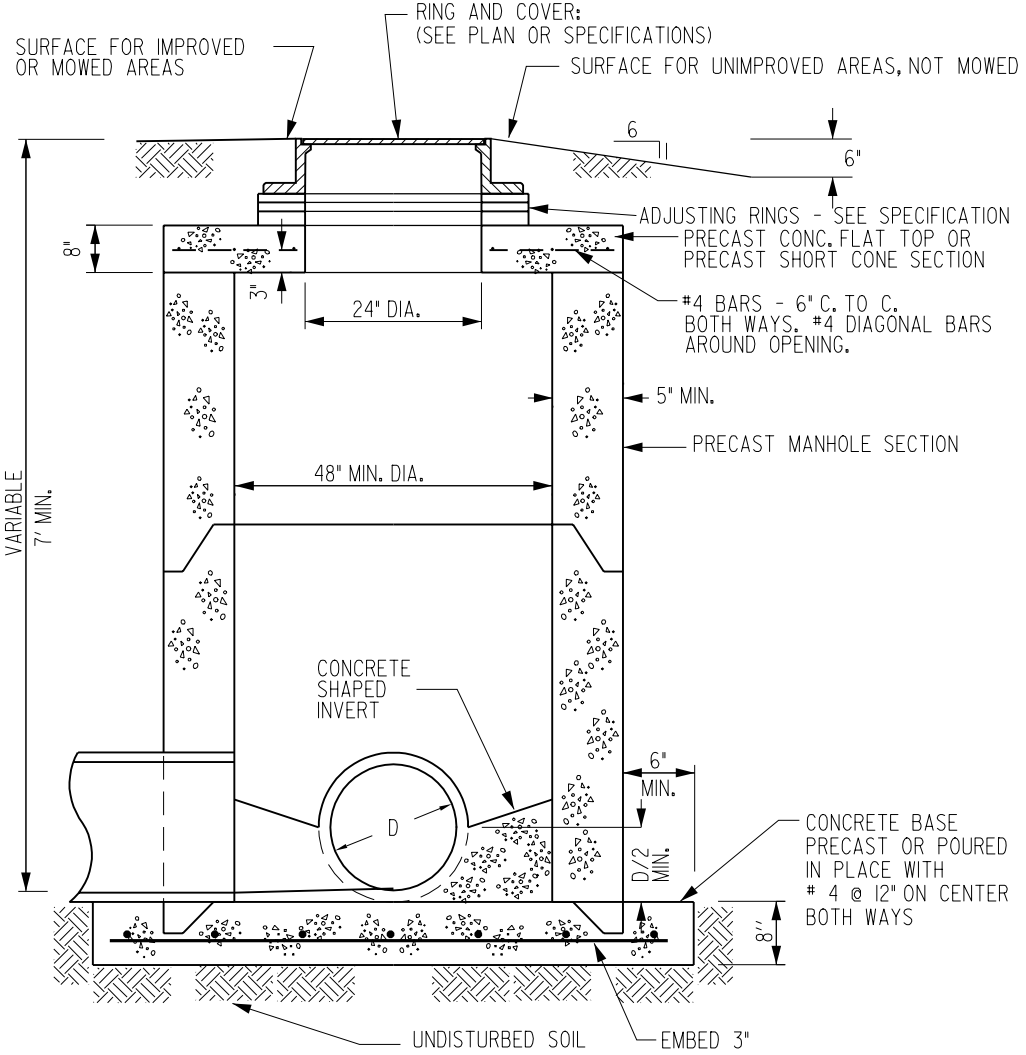

SECTION

NOTE:
MAX. PIPE SIZE 24" DIA.

REV.	DATE	BY	TYPE "M-A" MANHOLE (STORM SEWER)	FIGURE: 6020.12
1	01/25/01			
DATE: 01-01-98				SHEET 1 OF 1