SIZE OF METER	DIMENSIONS	
	A	D
5/8"	11 3/4"	48"
3/4"	13 3/4"	48"
1"	15 3/4"	48"
1 1/2"	30"	60"
2"	30"	60"

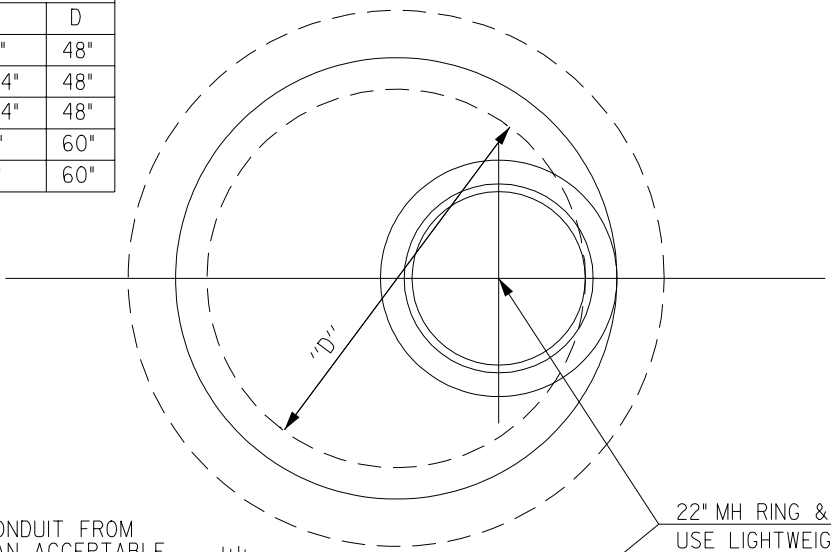

22" MH RING & COVER
USE LIGHTWEIGHT MH COVER ON PRIVATE PROPERTY

INSTALL 1/2 " CONDUIT FROM METER PIT TO AN ACCEPTABLE LOCATION FOR MOUNTING OF REMOTE METER RECEPTACLE

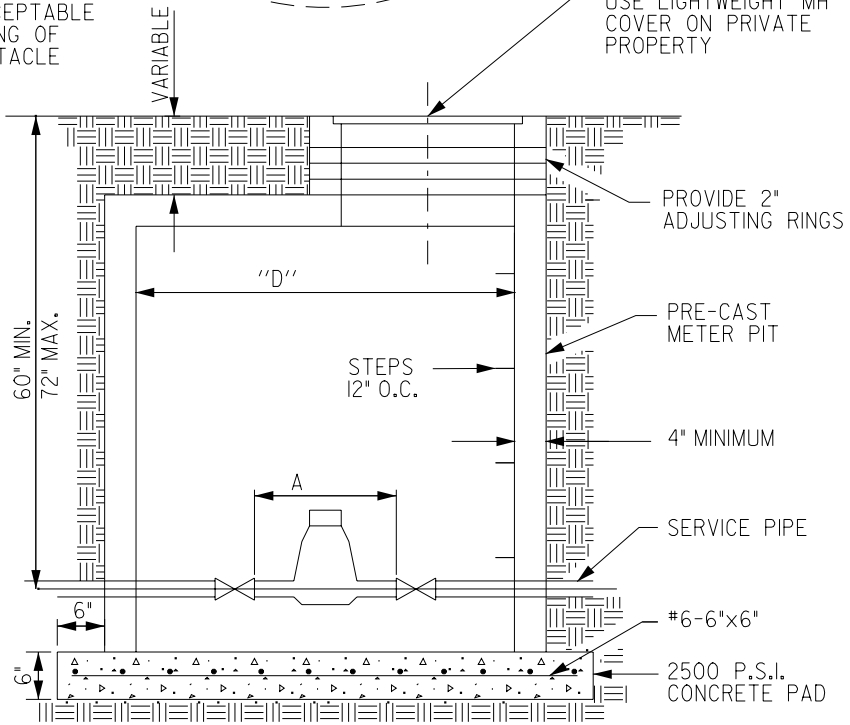

1	01/25/01		
REV.	DATE	BY	METER PIT
DATE: 05-25-25			FIGURE: 5010.10
			SHEET 1 OF 1