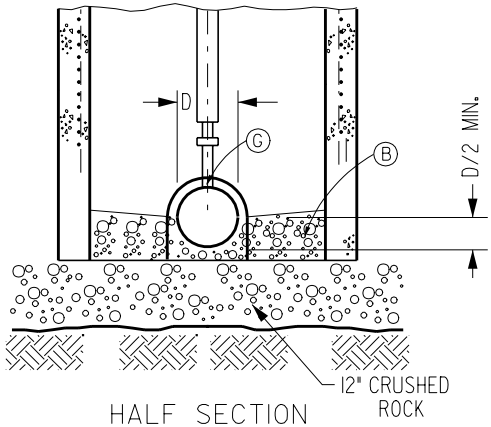

HALF SECTION
SECTION A-A

NOTE REFERENCE

Ⓐ RING & COVER - SEE SPECIFICATIONS

Ⓑ BACKFILL TO HAUNCH OF PIPE WITH BEDDING MATERIAL.

Ⓒ STANDARD MANHOLE SECTIONS.

Ⓓ 12" MIN. THICKNESS OF GRANULAR BEDDING MATERIALS.

Ⓔ UNDISTURBED SOIL

Ⓕ VOID BETWEEN PIPE AND MANHOLE SECTION KEEP FREE OF FOREIGN MATERIAL.

Ⓖ DO NOT REST MANHOLE SECTION ON SEWER PIPE.

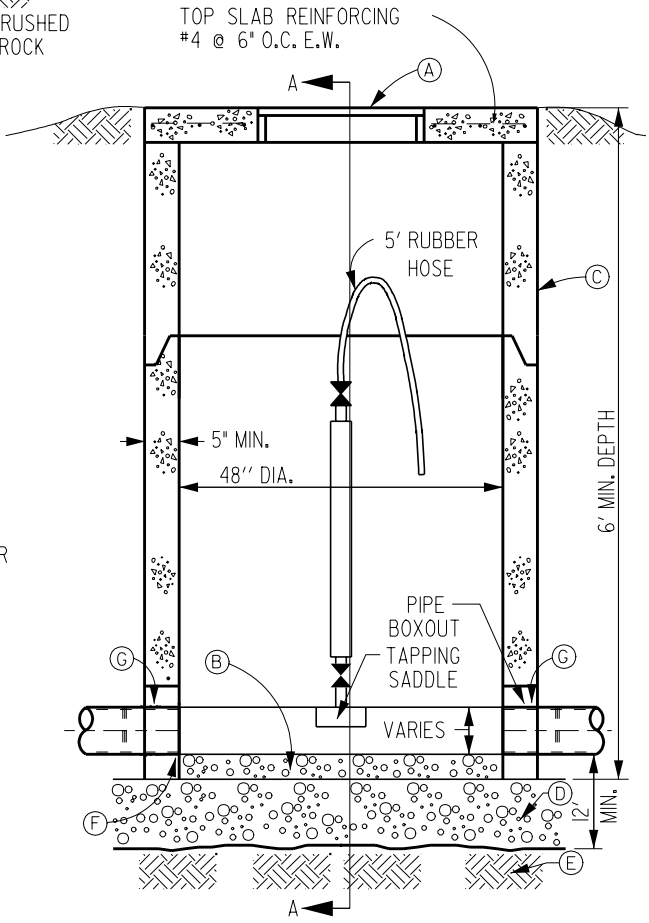

REV.	DATE	BY	SEWAGE AIR RELEASE VALVE (SANITARY SEWER)	FIGURE: 4010.3
DATE: 01-01-98				SHEET 1 OF 1