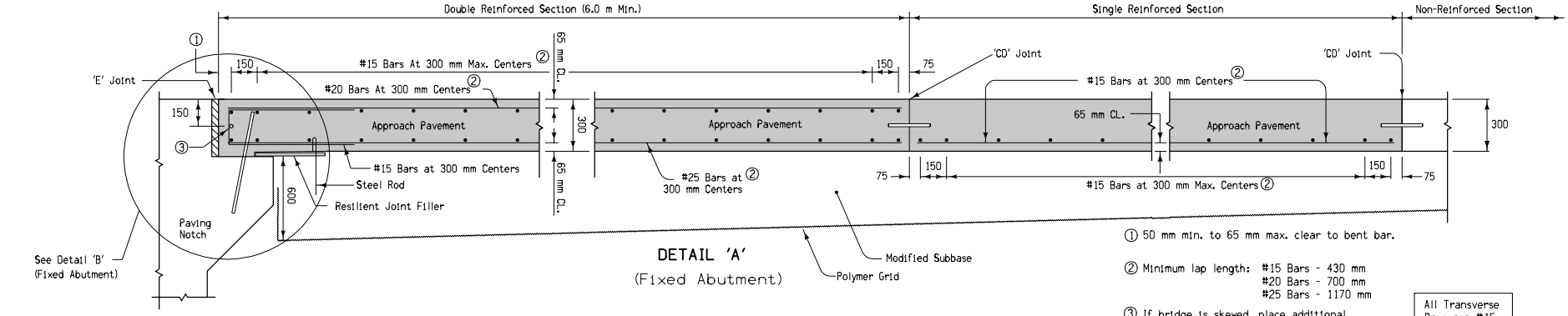

DETAIL 'A'
(Fixed Abutment)

① 50 mm min. to 65 mm max. clear to bent bar.

② Minimum lap length: #15 Bars - 430 mm
#20 Bars - 700 mm
#25 Bars - 1170 mm

③ If bridge is skewed, place additional #15 bar parallel to skewed face.

All Transverse Bars are #15.

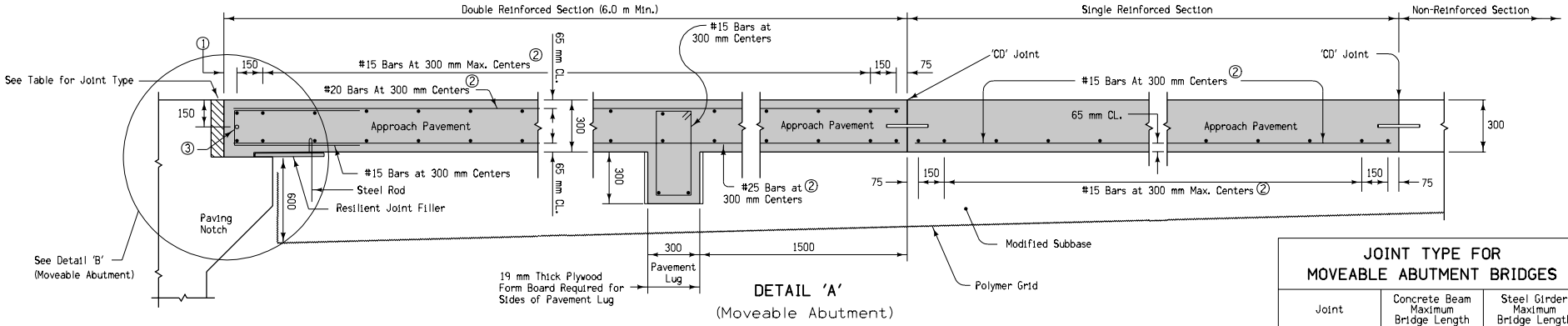

DETAIL 'A'
(Moveable Abutment)

JOINT TYPE FOR MOVEABLE ABUTMENT BRIDGES		
Joint	Concrete Beam Maximum Bridge Length	Steel Girder Maximum Bridge Length
CF-1	112.5 m	76.2 m
CF-2	141.7 m	97.5 m
CF-3	175.3 m	121.9 m

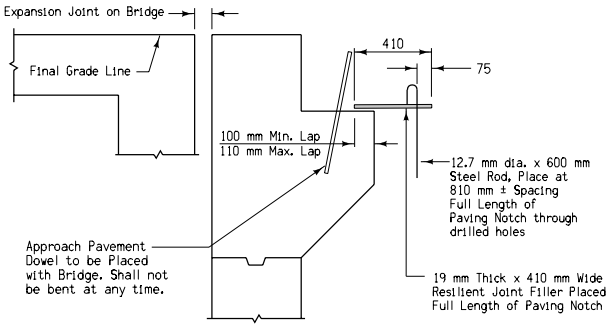

DETAIL 'B' (Fixed Abutment)

For joint details, see Standard Road Plans RH-50, RH-51, and RH-52.

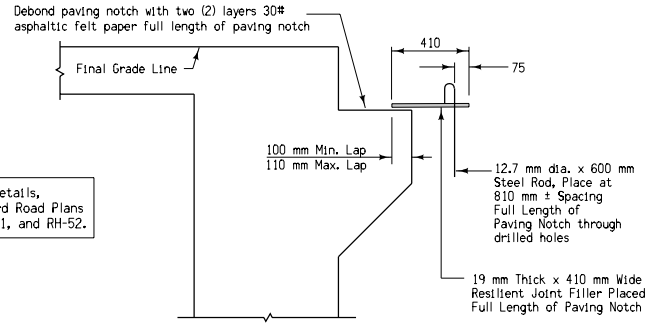

DETAIL 'B' (Moveable Abutment)

All dimensions given in millimeters unless noted.

M

METRIC VERSION

Iowa Department of Transportation
Highway Division

STANDARD ROAD PLAN **RK-20(1)**

REVISION: NEW

REVISION NO.	REVISION DATE
NEW	04-20-04

William J. Stein
APPROVED BY DESIGN METHODS ENGINEER

BRIDGE APPROACH
GENERAL - DETAILS
(Sheet 1 of 3)