DOWEL HEIGHT AND DIAMETER		
(T)	(DH)④	Diameter
180-190 mm	90 mm	20 mm
200-240 mm	110 mm	30 mm
250-290 mm	135 mm	35 mm
300-330 mm	160 mm	35 mm

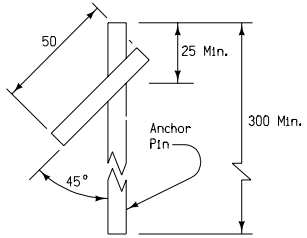

ANCHOR PIN DETAILS⑥

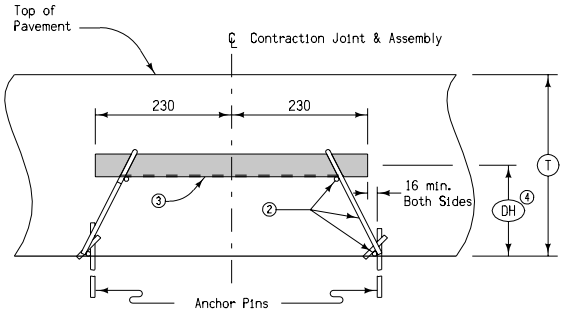

LONGITUDINAL SECTION

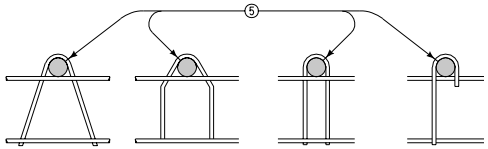

OPTIONAL LEG ASSEMBLES

GENERAL NOTES:

Dowel bars shall be 457 mm long with a tolerance of ± 3 mm. The centerline of individual dowels shall be parallel to the other dowels in the assembly within ± 3 mm.

Wire sizes shown are minimum required, and the wire shall have a minimum tensile strength of 345 MPa.

① Weld alternately thru-out.

② #1/0 gauge (8 mm diameter) wire

③ (3) #10 gauge (4 mm diameter) wire, tie wire welded or friction fit to top longitudinal wire, both sides.

④ Measured from the centerline of dowel bar to bottom of support wire +5 mm.

⑤ Diameter of bend around dowel is dowel diameter +3 mm to 5 mm.

⑥ Anchor pins shall be #1/0 gauge (8mm diameter) wire and shall prevent movement of assembly during construction.

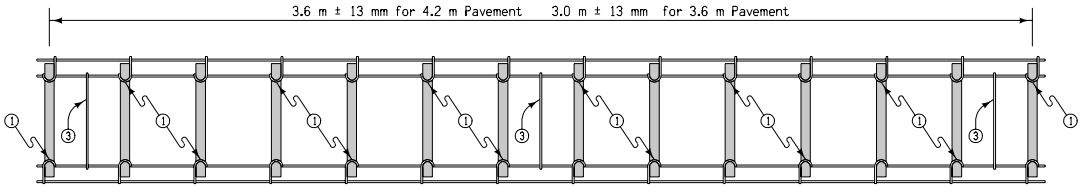

PLAN VIEW

Spaces between dowel bars are nominal dimensions with a 6 mm allowable tolerance.

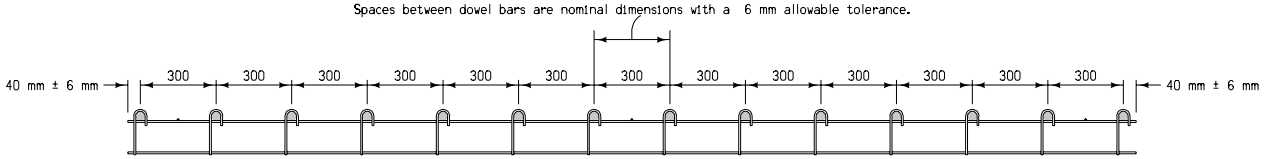

ELEVATON

All dimensions given in millimeters unless noted.

M

METRIC VERSION

Iowa Department of Transportation
Highway Division

STANDARD ROAD PLAN | **RH-55**

REVISION: Revise circle notes.

REVISION NO. 5

REVISION DATE 04-20-04

William J. Stein
APPROVED BY DESIGN METHODS ENGINEER

FABRICATION DETAILS
CONTRACTION JOINT
DOWEL ASSEMBLY