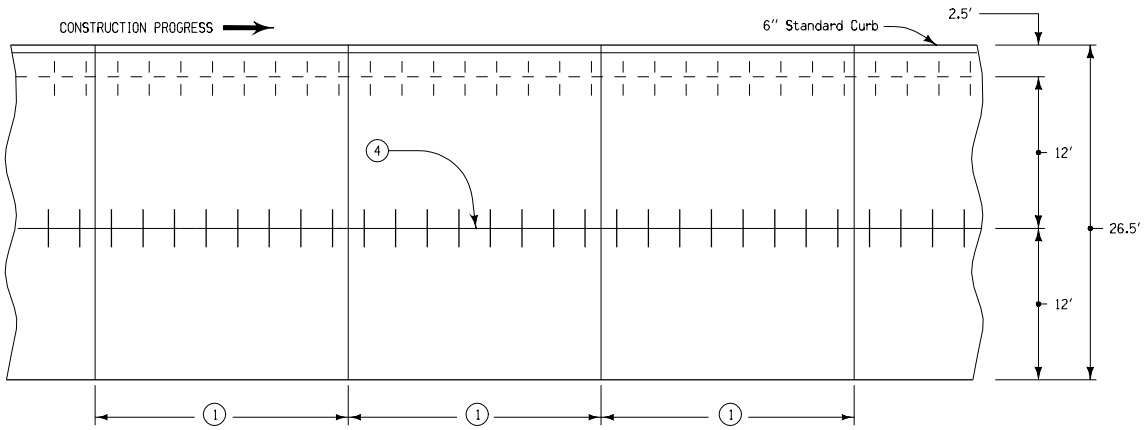

TYPICAL PAVEMENT PLAN

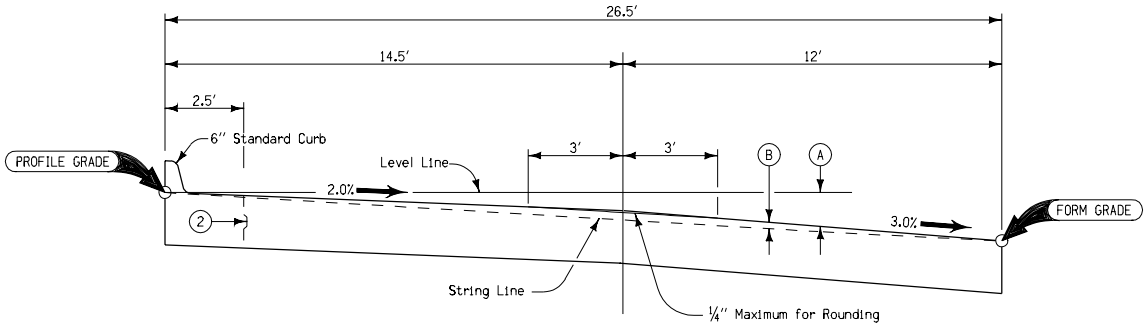

TYPICAL CROSS SECTION

GENERAL NOTES:

Details indicated on this plan are intended to illustrate the general requirements for Two-lane P.C. Concrete Pavements 26.5' in width.

Refer to Standard Road Plans RH-50, 51 and 52 for details of construction of joints in pavement. Transverse Joints will be 'CD' except when 'C' joints are specifically required as a part of detail project plans or when T is less than 8".

Normal crown shall be a straight line sloped from the profile grade for the distance and rate indicated. This crown may be varied through superelevated curves and intersection areas where special shaping is required or other areas specifically authorized by the engineer.

The price bid for "Standard or Slip-Form PCC pavement" class and thickness as specified, in sq. yds, including all required joints, shall be considered full compensation for the construction of pavement as detailed hereon.

1. Transverse joint spacing 20' (normal) for 'CD' joint (no dowels in outside 2.5' of pavement). 15' (normal) for 'C' joint.
2. Optional: 'BT–1' Joint if pavement is less than 8". 'KT–2' Joint, if pavement thickness is 8" or greater.
3. Quantities include 6" curb.
4. Joints will be:
   'L–1' or 'BT–1' for T less than 8".
   'L–2' or 'KT–2' for T greater or equal to 8".

PER STATION DESIGN VALUES FOR (26.5' B-B) PAVEMENT SECTION (3)						
ITEM	UNIT	T=6"	T=7"	T=8"	T=9"	T=10"
Section Area	Sq. Ft.	13.50	15.708	17.916	20.125	22.333
Concrete Volume	Cu. Yds.	50.000	58.178	66.356	74.537	82.715
Surface Area	Sq. Yds.	294.444	294.444	294.444	294.444	294.444

OFFSETS FOR 26.5' PAVEMENT WITH 6" STANDARD CURBS

Distance From ℄		0.5'	1.5'	2.5'	3.5'	4.5'	5.5'	6.5'	7.5'	8.5'	9.5'	10.5'	11.5'	12.5'	13.5'	14.5'	15.5'	16.5'	17.5'	18.5'	19.5'	20.5'	21.5'	22.5'	23.5'	24.5'	25.5'	26.5'
(A)	Inches	1/8	3/8	5/8	13/16	1 1/16	1 5/16	1 9/16	1 13/16	2 1/16	2 1/4	2 1/2	2 3/4	3	3 1/4	3 1/2	3 13/16	4 3/16	4 9/16	4 15/16	5 1/4	5 5/8	6	6 3/8	6 3/4	7 1/16	7 7/16	7 13/16
	Feet	0.01	0.03	0.05	0.07	0.09	0.11	0.13	0.15	0.17	0.19	0.21	0.23	0.25	0.27	0.29	0.32	0.35	0.38	0.41	0.44	0.47	0.50	0.53	0.56	0.59	0.62	0.65
(B)	Inches	—	1/16	1/8	3/16	1/4	5/16	3/8	3/8	7/16	1/2	9/16	5/8	11/16	3/4	13/16	3/4	5/8	9/16	1/2	7/16	3/8	5/16	1/4	3/16	1/8	1/16	0
	Feet	0.002	0.007	0.011	0.016	0.020	0.025	0.029	0.034	0.038	0.043	0.047	0.052	0.057	0.061	0.066	0.060	0.055	0.049	0.044	0.038	0.033	0.027	0.022	0.016	0.011	0.005	0.000

Iowa Department of Transportation
Highway Division

STANDARD ROAD PLAN | **RH–49**

REVISION: Remove skewed joints.

REVISION NO. 4

REVISION DATE 04-30-02

William J. Stein
APPROVED BY DESIGN METHODS ENGINEER

NON-REINFORCED FOUR LANE
26.5' P. C. CONCRETE PAVEMENT
DIVIDED ROADWAY