GENERAL NOTES:

Painting of casting is not required; however, if used, paint shall be evenly applied and neither sticky nor brittle when dry.

An identifiable trade name or mark may be imprinted on castings by the foundry.

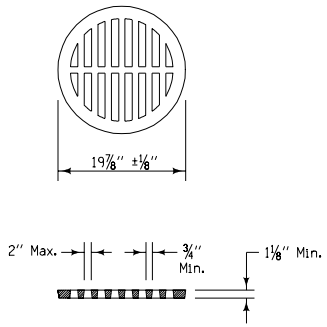

TYPE 4A GRATE ①

Minimum Weight = 65 lbs.

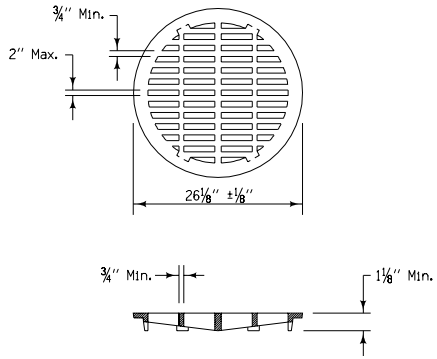

TYPE 4B GRATE ①

Minimum Weight = 100 lbs.

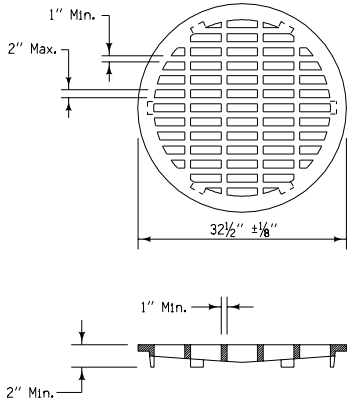

TYPE 4C GRATE ①

Minimum Weight = 160 lbs.

① For Type 4 grates, a frame is required only when specified in detailed plans. Frames shall be of adequate and proper dimensions to satisfactorily accommodate the grates.

② Unless otherwise specified, Type 9 grate shall be cast without locking lugs so that it may be used in an inverted position when so desired.

TYPE 4 FRAME REQUIREMENTS	
TYPE	D - PIPE DIAMETER
4A	18″
4B	24″
4C	30″
4D	36″

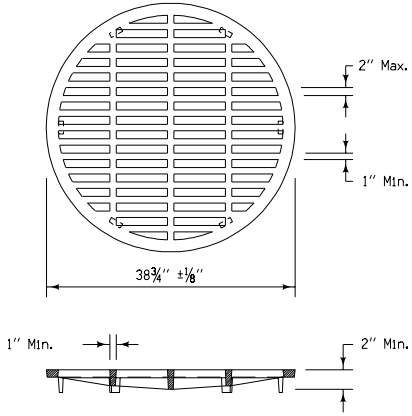

TYPE 4D GRATE ①

Minimum Weight = 240 lbs.

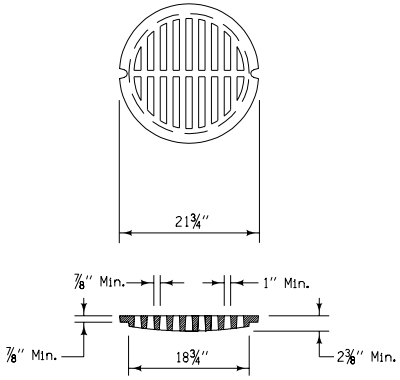

TYPE 9 GRATE ②

Minimum Weight = 85 lbs.

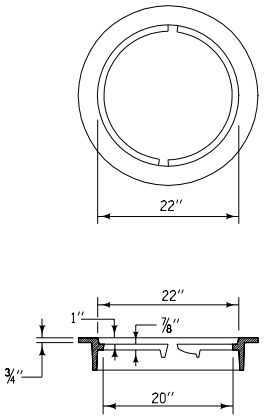

TYPE 9 FRAME

Minimum Weight = 75 lbs.

Iowa Department of Transportation
Highway Division

STANDARD ROAD PLAN | **RA-66C**

REVISION: Revise General Notes.

REVISION NO. 1

REVISION DATE 10-21-03

William G. Stein
APPROVED BY DESIGN METHODS ENGINEER

INTAKE GRATES
TYPES 4A, 4B, 4C, AND 4D
AND GRATE AND FRAME TYPE 9