BILL OF REINFORCING FOR ONE HEADWALL 15° SKEW CULVERT SPAN X CULVERT HEIGHT

BAR	LOCATION	SHAPE	12'-0 x 12'-0 NO.	LENGTH	WEIGHT	12'-0 x 10'-0 NO.	LENGTH	WEIGHT	12'-0 x 8'-0 NO.	LENGTH	WEIGHT	12'-0 x 6'-0 NO.	LENGTH	WEIGHT	10'-0 x 12'-0 NO.	LENGTH	WEIGHT	10'-0 x 10'-0 NO.	LENGTH	WEIGHT	10'-0 x 8'-0 NO.	LENGTH	WEIGHT	10'-0 x 6'-0 NO.	LENGTH	WEIGHT	MARK
5fa	FENCE ANCHOR (GALV.)		2	3'-1	6	2	3'-1	6	2	3'-1	6	2	3'-1	6	2	3'-1	6	2	3'-1	6	2	3'-1	6	2	3'-1	6	5fa
4b1	WINGWALL, B.F.H. LONG		1	45'-1	31	1	38'-3	26	1	31'-5	21	1	24'-6	16	1	45'-1	31	1	38'-3	26	1	31'-5	21	1	24'-6	16	4b1
4b2	WINGWALL, B.F.H. SHORT		1	39'-10	27	1	33'-10	23	1	27'-10	19	1	21'-10	15	1	39'-10	27	1	33'-10	23	1	27'-10	19	1	21'-10	15	4b2
4b3	WINGWALL, B.F.H. LONG		10 VAR	12'-8: 43'-7	191	8 VAR	12'-8: 36'-8	132	6 VAR	12'-8: 29'-10	85	4 VAR	12'-8: 23'-0	48	10 VAR	12'-8: 43'-7	191	8 VAR	12'-8: 36'-8	132	6 VAR	12'-8: 29'-10	85	4 VAR	12'-8: 23'-0	48	4b3
4b4	WINGWALL, B.F.H. SHORT		10 VAR	11'-5: 38'-5	166	8 VAR	11'-5: 32'-5	117	6 VAR	11'-5: 26'-5	76	4 VAR	11'-5: 20'-5	43	10 VAR	11'-5: 38'-5	166	8 VAR	11'-5: 32'-5	117	6 VAR	11'-5: 26'-5	76	4 VAR	11'-5: 20'-5	43	4b4
5b5	WINGWALL, F.F.H. LONG		1	45'-1	49	1	38'-3	40	1	31'-5	33	1	24'-6	26	1	45'-1	49	1	38'-3	40	1	31'-5	33	1	24'-6	26	5b5
5b6	WINGWALL, F.F.H. SHORT		1	39'-10	42	1	33'-10	35	1	27'-10	29	1	21'-10	23	1	39'-10	42	1	33'-10	35	1	27'-10	29	1	21'-10	23	5b6
5b7	WINGWALL, F.F.H. LONG		11 VAR	9'-2: 43'-7	307	9 VAR	9'-2: 36'-8	215	7 VAR	9'-2: 29'-10	142	5 VAR	9'-2: 23'-0	84	11 VAR	9'-2: 43'-7	307	9 VAR	9'-2: 36'-8	215	7 VAR	9'-2: 29'-10	142	5 VAR	9'-2: 23'-0	84	5b7
5b8	WINGWALL, F.F.H. SHORT		11 VAR	8'-5: 38'-5	269	9 VAR	8'-5: 32'-5	192	7 VAR	8'-5: 26'-5	127	5 VAR	8'-5: 20'-5	75	11 VAR	8'-5: 38'-5	269	9 VAR	8'-5: 32'-5	192	7 VAR	8'-5: 26'-5	127	5 VAR	8'-5: 20'-5	75	5b8
5b9	CENTER WALLS, BOTH F.H.		42 VAR	2 EACH 5'-0: 27'-11	721	34 VAR	2 EACH 5'-0: 23'-10	511	26 VAR	2 EACH 5'-1: 19'-8	336	18 VAR	2 EACH 5'-2: 15'-6	194	42 VAR	2 EACH 5'-0: 27'-11	721	34 VAR	2 EACH 5'-0: 23'-10	511	26 VAR	2 EACH 5'-1: 19'-8	336	18 VAR	2 EACH 5'-2: 15'-6	194	5b9
4c1	WINGWALL, F.F.V. LONG		42 VAR	2'-10: 14'-10	248	35 VAR	2'-10: 12'-9	182	29 VAR	2'-10: 10'-9	132	22 VAR	2'-10: 8'-8	85	42 VAR	2'-9: 14'-9	245	35 VAR	2'-9: 12'-8	180	29 VAR	2'-9: 10'-8	130	22 VAR	2'-9: 8'-7	83	4c1
4c2	WINGWALL, F.F.V. SHORT		37 VAR	2'-11: 14'-11	220	31 VAR	2'-11: 12'-11	164	25 VAR	2'-11: 10'-11	116	19 VAR	2'-11: 8'-11	75	37 VAR	2'-10: 14'-10	218	31 VAR	2'-10: 12'-10	162	25 VAR	2'-10: 10'-10	114	19 VAR	2'-10: 8'-10	74	4c2
4c3	WINGWALL, F.F.V. LONG		1	13'-9	9	1	11'-9	8	1	9'-9	7	1	7'-9	5	1	13'-8	9	1	11'-8	8	1	9'-8	6	1	7'-8	5	4c3
4c3	WINGWALL, F.F.V. SHORT		1	13'-9	9	1	11'-9	8	1	9'-9	7	1	7'-9	5	1	13'-8	9	1	11'-8	8	1	9'-8	6	1	7'-8	5	4c3
4c4	CENTER WALLS, BOTH F.V.		4	1'-9	5	4	1'-9	5	4	1'-9	5	4	1'-9	5	4	1'-8	4	4	1'-8	4	4	1'-8	4	4	1'-8	4	4c4
4c5	CENTER WALLS, BOTH F.V.		98 VAR	2 EACH 2'-0: 12'-5	472	82 VAR	2 EACH 2'-0: 10'-6	342	66 VAR	2 EACH 2'-0: 8'-6	231	48 VAR	2 EACH 2'-0: 6'-5	135	98 VAR	2 EACH 1'-11: 12'-4	466	82 VAR	2 EACH 1'-11: 10'-5	338	66 VAR	2 EACH 1'-11: 8'-5	228	48 VAR	2 EACH 1'-11: 6'-4	132	4c5
4c6	CENTER WALLS, BOTH F.V.		4	12'-7	34	4	10'-7	28	4	8'-7	23	4	6'-7	18	4	12'-6	33	4	10'-6	28	4	8'-6	23	4	6'-6	17	4c6
5c7	WINGWALL, B.F.V. LONG		9 VAR	2'-10: 5'-2	38	9 VAR	2'-10: 5'-2	38	9 VAR	2'-10: 5'-2	38	9 VAR	2'-10: 5'-2	38	9 VAR	2'-9: 5'-1	37	9 VAR	2'-9: 5'-1	37	9 VAR	2'-9: 5'-1	37	9 VAR	2'-9: 5'-1	37	5c7
5c8	WINGWALL, B.F.V. SHORT		6 VAR	2'-11: 4'-7	23	6 VAR	2'-11: 4'-7	23	6 VAR	2'-11: 4'-7	23	6 VAR	2'-11: 4'-7	23	6 VAR	2'-10: 4'-6	23	6 VAR	2'-10: 4'-6	23	6 VAR	2'-10: 4'-6	23	6 VAR	2'-10: 4'-6	23	5c8
5c9	WINGWALL, B.F.V. LONG		33 VAR	9'-5: 18'-10	486	26 VAR	9'-5: 16'-9	355	20 VAR	9'-5: 14'-9	252	13 VAR	9'-5: 12'-8	150	33 VAR	9'-4: 18'-9	483	26 VAR	9'-4: 16'-8	353	20 VAR	9'-4: 14'-8	250	13 VAR	9'-4: 12'-7	149	5c9
5c10	WINGWALL, B.F.V. SHORT		31 VAR	8'-11: 18'-11	450	25 VAR	8'-11: 16'-11	337	19 VAR	8'-11: 14'-11	236	13 VAR	8'-11: 12'-11	148	31 VAR	8'-10: 18'-10	447	25 VAR	8'-10: 16'-10	335	19 VAR	8'-10: 14'-10	234	13 VAR	8'-10: 12'-10	147	5c10
5c11	WINGWALL, B.F.V. LONG		25	10'-6	274	18	10'-6	197	11	10'-6	120	—	—	—	25	10'-6	274	18	10'-6	197	11	10'-6	120	—	—	—	5c11
5c11	WINGWALL, B.F.V. SHORT		20	10'-6	219	14	10'-6	153	8	10'-6	88	—	—	—	20	10'-6	219	14	10'-6	153	8	10'-6	88	—	—	—	5c11
5c12	WINGWALL, B.F.V. LONG		1	17'-8	18	1	15'-8	16	1	13'-8	14	1	11'-8	12	1	17'-7	18	1	15'-7	16	1	13'-7	14	1	11'-7	12	5c12
5c12	WINGWALL, B.F.V. SHORT		1	17'-8	18	1	15'-8	16	1	13'-8	14	1	11'-8	12	1	17'-7	18	1	15'-7	16	1	13'-7	14	1	11'-7	12	5c12
4d1	APRON, LONGIT., BOTTOM		25	28'-4	473	25	24'-2	404	25	20'-0	334	25	15'-11	266	21	28'-4	397	21	24'-2	339	21	20'-0	281	21	15'-11	223	4d1
4d2	APRON, LONGIT., BOTT. LONG		3	39'-4	79	3	32'-8	65	3	25'-11	52	3	19'-1	38	3	39'-4	79	3	32'-8	65	3	25'-11	52	3	19'-1	38	4d2
4d3	APRON, LONGIT. BOTT. SHORT		3	34'-11	70	3	29'-0	58	3	23'-1	46	3	17'-2	34	3	34'-11	70	3	29'-0	58	3	23'-1	46	3	17'-2	34	4d3
6f1	APRON, LONGIT., TOP		37	28'-4	1575	37	24'-2	1343	37	20'-0	1111	37	15'-11	885	31	28'-4	1319	31	24'-2	1125	31	20'-0	931	31	15'-11	741	6f1
6f2	APRON, LONGIT., TOP, LONG		9 VAR	5'-5: 25'-8	210	7 VAR	6'-3: 21'-5	145	5 VAR	7'-2: 17'-4	92	4 VAR	5'-6: 13'-2	56	9 VAR	5'-5: 25'-8	210	7 VAR	6'-3: 21'-5	145	5 VAR	7'-2: 17'-4	92	4 VAR	5'-6: 13'-2	56	6f2
6f3	APRON, LONGIT., TOP SHORT		8 VAR	5'-5: 25'-8	187	6 VAR	7'-0: 21'-7	129	5 VAR	5'-9: 17'-5	87	4 VAR	4'-5: 13'-3	53	8 VAR	5'-5: 25'-8	187	6 VAR	7'-0: 21'-7	129	5 VAR	5'-9: 17'-5	87	4 VAR	4'-5: 13'-3	53	6f3
6f4	APRON, LONGIT., TOP, LONG		1	45'-1	71	1	38'-3	57	1	31'-5	47	1	24'-6	37	1	45'-1	71	1	38'-3	57	1	31'-5	47	1	24'-6	37	6f4
6f5	APRON, LONGIT., TOP SHORT		1	39'-10	60	1	33'-10	51	1	27'-10	42	1	21'-10	33	1	39'-10	60	1	33'-10	51	1	27'-10	42	1	21'-10	33	6f5
4i1	PARAPET, VERTICAL		79	6'-2	325	77	6'-2	317	77	6'-2	317	77	6'-2	317	67	6'-2	276	65	6'-2	268	65	6'-2	268	65	6'-2	268	4i1
7j1	PARAPET, HORIZONTAL		4	41'-0	353	4	40'-4	347	4	40'-4	347	4	40'-0	327	4	34'-10	285	4	34'-2	279	4	34'-2	279	4	33'-9	276	7j1
6m1	APRON, TRANS., TOP		8 VAR	42'-7: 41'-3	536	8 VAR	41'-11: 40'-7	528	8 VAR	41'-11: 40'-7	528	8 VAR	41'-7: 40'-3	524	7 VAR	36'-2: 35'-1	375	7 VAR	35'-6: 34'-5	368	7 VAR	35'-6: 34'-5	368	7 VAR	35'-2: 34'-1	364	6m1
6m2	APRON, TRANS., TOP		21 VAR	50'-4: 42'-10	1553	15 VAR	47'-5: 42'-2	1069	10 VAR	45'-7: 42'-2	699	4 VAR	43'-0: 41'-10	271	23 VAR	44'-9: 36'-6	1456	17 VAR	41'-10: 35'-10	1011	12 VAR	39'-11: 35'-10	683	6 VAR	37'-4: 35'-6	328	6m2
6m3	APRON, TRANS., TOP		13 VAR	40'-2: 8'-10	482	13 VAR	40'-1: 8'-9	481	13 VAR	37'-8: 6'-4	430	13 VAR	37'-9: 6'-5	431	11 VAR	34'-9: 8'-8	359	11 VAR	34'-8: 8'-7	357	11 VAR	32'-3: 6'-2	317	11 VAR	32'-4: 6'-3	319	6m3
6m5	APRON, TRANS., BOTTOM		24 VAR	47'-5: 35'-0	1542	20 VAR	44'-10: 34'-7	1229	16 VAR	42'-9: 34'-8	950	12 VAR	40'-5: 34'-6	679	24 VAR	41'-2: 28'-9	1268	20 VAR	38'-8: 28'-5	1008	16 VAR	36'-6: 28'-6	781	12 VAR	34'-2: 28'-3	563	6m5
6p1	CURTAIN, HORIZONTAL		4	39'-7	238	4	39'-3	236	4	39'-2	235	4	39'-0	234	4	33'-4	200	4	33'-0	198	4	33'-0	198	4	32'-10	197	6p1
6p2	CURTAIN, HORIZ. LONG		4	21'-10	131	4	18'-9	113	4	15'-9	95	4	12'-9	77	4	21'-10	131	4	18'-9	113	4	15'-9	95	4	12'-9	77	6p2
6p3	CURTAIN, HORIZ. SHORT		4	16'-11	102	4	14'-8	88	4	12'-5	75	4	10'-3	62	4	16'-11	102	4	14'-7	88	4	12'-5	75	4	10'-3	62	6p3
6s1	WING SLOPE, BOTH F. LONG		2	6'-11	21	2	6'-11	21	2	6'-11	21	2	6'-11	21	2	6'-11	21	2	6'-11	21	2	6'-11	21	2	6'-11	21	6s1
6s2	WING SLOPE, BOTH F. SHORT		2	6'-6	20	2	6'-6	20	2	6'-6	20	2	6'-6	20	2	6'-6	20	2	6'-6	20	2	6'-6	20	2	6'-6	20	6s2
6s3	WING SLOPE, BOTH F. LONG		2	41'-9	131	2	34'-7	104	2	27'-6	83	2	20'-4	61	2	41'-9	131	2	34'-7	104	2	27'-6	83	2	20'-4	61	6s3
6s4	WING SLOPE, BOTH F. SHORT		2	37'-4	112	2	31'-0	93	2	24'-8	74	2	18'-4	55	2	37'-4	112	2	31'-0	93	2	24'-8	74	2	18'-4	55	6s4
6s5	WING SLOPE, F.F. LONG		1	46'-1	72	1	38'-11	58	1	31'-9	48	1	24'-7	37	1	46'-1	72	1	38'-11	58	1	31'-9	48	1	24'-7	37	6s5
6s6	WING SLOPE, F.F. SHORT		1	41'-3	65	1	34'-11	52	1	28'-8	43	1	22'-4	34	1	41'-3	65	1	34'-11	52	1	28'-8	43	1	22'-4	34	6s6
6s7	CENTER WALL, BOTH F.HOR.		4	30'-6	183	4	25'-11	156	4	21'-4	128	4	16'-9	101	4	30'-6	183	4	25'-11	156	4	21'-4	128	4	16'-9	101	6s7
5t1	CURTAIN, VERTICAL		52	7'-11	429	48	7'-5	371	45	6'-11	325	40	6'-5	268	46	7'-11	380	42	7'-5	325	39	6'-11	281	34	6'-5	228	5t1
ESTIMATED QUANTITIES ONE HEADWALL	REINFORCING STEEL		13,352 LBS.			10,704 LBS.			8409 LBS.			6162 LBS.			12,141 LBS.			9643 LBS.			7505 LBS.			5456 LBS.		
	CONC.	PARAPET Δ	3.7	116.8 CU. YD.		3.6	86.9 CU. YD.		3.6	66.6 CU. YD.		3.5	47.2 CU. YD.		3.3	105.0 CU. YD.		3.1	76.9 CU. YD.		3.1	58.4 CU. YD.		3.0	40.9 CU. YD.		
		WINGWALLS	35.2			21.1			14.2			7.7			35.2			21.1			14.2			7.8			
		FOOTINGΔΔ	77.9			62.2			48.8			36.0			66.5			52.7			41.1			30.1			

BENT BAR DETAILS

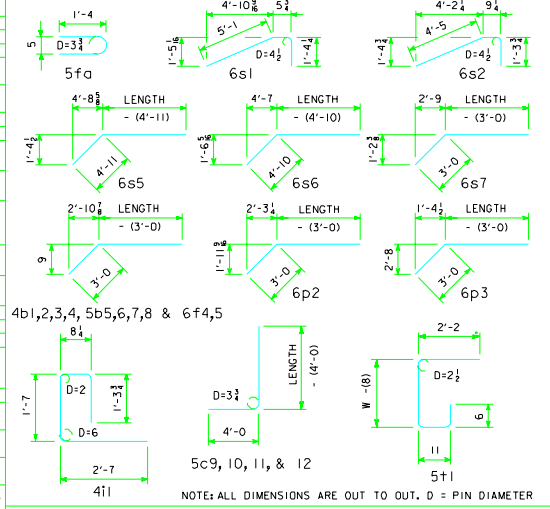

NOTE: ALL DIMENSIONS ARE OUT TO OUT. D = PIN DIAMETER

"SHORT" DENOTES SHORT WINGWALL

"LONG" DENOTES LONG WINGWALL

VARIABLE LENGTH BARS DENOTED BY X:Y

WEIGHT OF BARS OVER 40'-0 LONG INCLUDES AN ALLOWANCE FOR LAP (2'-8 FOR TOP APRON "m" BARS AND 2'-2 ALL OTHER BARS). LENGTHS SHOWN FOR BARS OVER 40'-0 LONG DO NOT INCLUDE LAP (2'-8 FOR TOP APRON "m" BARS AND 2'-2 ALL OTHER).

Δ NOTE: INCLUDES TOP OF WINGWALL QUANTITIES.

ΔΔ ASSUMES APRON AND FLOOR ARE EQUAL THICKNESS, ADJUST CONCRETE QUANTITIES FOR TRANSITION WHERE APRON AND FLOOR THICKNESS ARE NOT EQUAL.

HEADWALL NOTES:

SEE SHEET TRRCB-G1-01 FOR GENERAL INFORMATION, SPECIFICATIONS, AND DESIGN STRESSES.

THIS HEADWALL IS BASED ON A 3:1 SLOPE NORMAL TO CENTERLINE OF ROADWAY. THE SIDES OF THE FOOTING ARE TO BE FORMED TO INSURE CORRECT LINE AND GRADE.

ALL EXPOSED CORNERS OF 90° OR SHARPER ARE TO BE FILLETED WITH A ¾" DRESSED AND BEVELED STRIP.

ALL REINFORCING IS TO BE SECURELY WIRED IN PLACE BEFORE THE CONCRETE IS POURED. ALL SLAB AND FLOOR REINFORCING STEEL IS TO BE SUPPORTED BY BAR CHAIRS AT INTERVALS OF NOT MORE THAN 3'-0 IN EITHER DIRECTION AS OUTLINED IN THE STANDARD SPECIFICATIONS.

CLEAR DISTANCE FROM FACE OF CONCRETE TO NEAR REINFORCING BAR IS TO BE 2" UNLESS OTHERWISE NOTED OR SHOWN.

CONCRETE QUANTITIES ARE ESTIMATED FROM BACK OF PARAPET.

HORIZONTAL TAILS OF BARS "b" & "s" ESTIMATED TO EXTEND 2'-0 BEYOND BACK OF PARAPET (INTO END OF BARREL). LONGITUDINAL BARS "d", "6f1", "6f4", AND "6f5" ESTIMATED TO PROJECT INTO END SECTION OF BARREL A MINIMUM OF 2'-0 BEYOND BACK OF PARAPET.

THE "LENGTH" COLUMN REFLECTS TOTAL NUMBER OF FEET NECESSARY TO MEET THESE REQUIREMENTS.

LATEST REVISION DATE :

APPROVED BY :

STANDARD DESIGN

FLARED WING HEADWALLS

FOR

TRIPLE REINFORCED CONCRETE BOX CULVERTS

IOWA DEPARTMENT OF TRANSPORTATION - HIGHWAY DIVISION

SEPT., 2001

TRH 15-5-01

REVISED 06-02 - 4i1 BARS NUMBER CHANGED.
TRH15S01 - 09-01 THIS SHEET ISSUED.

XXXXXXXXXXSYSTEMTIME XXXXXXXUSERNAME XXXXXXXXXX