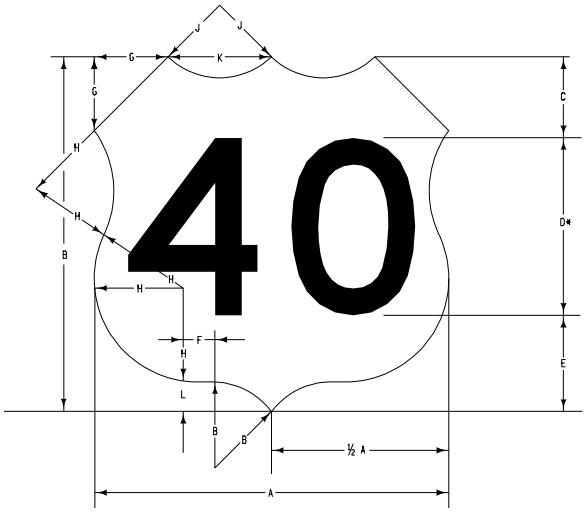

* Optically space numerals about vertical centerline

SIGN	DIMENSIONS (INCHES)										
	A	B	C	D	E	F	G	H	J	K	L
1,2-Digits	610	610	140	3000	170	25	125	180	130	180	50
1,2-Digits	910	910	210	3500	250	38	190	270	190	270	75
3-Digits	760	610	140	3000	170	100	130	180	230	250	50
3-Digits	1140	910	210	3500	250	140	190	270	340	380	75

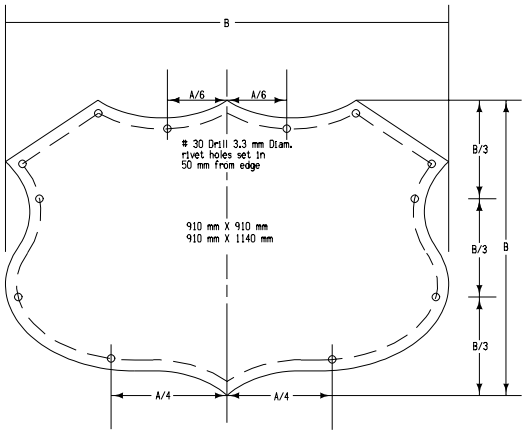

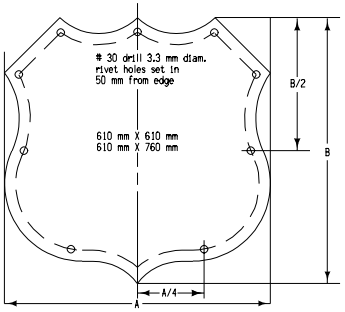

LOCATION OF RIVET HOLES FOR U.S. ROUTE MARKERS

Note: For use on ground mounted or overhead signs.

The U. S. Route Markers and the Iowa Route Markers to be attached to all Type 'B' guide signs shall be 1.63 mm metal (tolerance of 0.01 mm) with a background of smooth silver reflective sheeting. Route marker numerals shall be black ink applied by direct silk screen process.

Dimensions shall be to the nearest 3.2 mm .

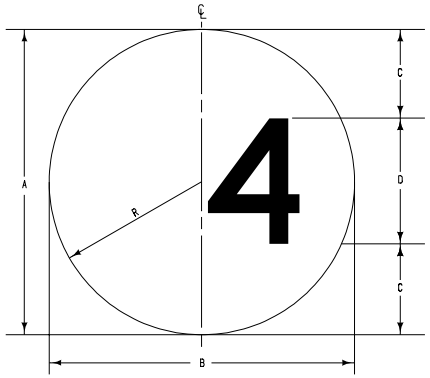

	150 mm Numerals		250 mm Numerals 300 mm Numerals		300 mm Numerals 380 mm Numerals		380 mm Numerals 460 mm numerals	
A	410		610		760		920	
B	410		610		760		920	
C	130		180		230		270	
D	1 or 2 digits	3 digits	1 or 2 digits	3 digits	1 or 2 digits	3 digits	1 or 2 digits	3 digits
	150 D	150 C	300 D	250 D	375 D	300 D	450 D	375 C
R	205		305		380		460	

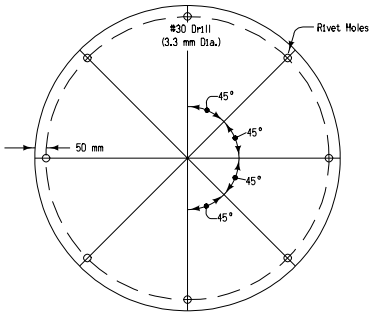

The 410 mm, 610 mm, 760 mm and 920 mm State Route Markers shall have 8 rivet holes spaced as shown above.

LOCATION OF RIVET HOLES FOR STATE ROUTE MARKERS

All dimensions in mm unless noted.

M

METRIC VERSION

Iowa Department of Transportation
Highway Division

STANDARD ROAD PLAN | **RD-43**

REVISION: NEW

REVISION NO.
NEW
REVISION DATE
04-15-03

William J. Stein
APPROVED BY DESIGN METHODS ENGINEER

U.S. & STATE ROUTE MARKERS FOR TYPE 'B' GUIDE SIGNS