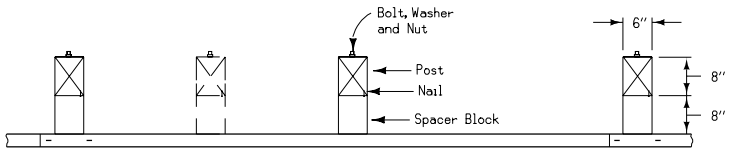

PLAN VIEW

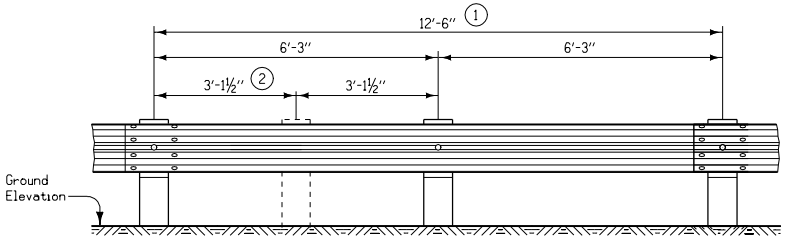

ELEVATION

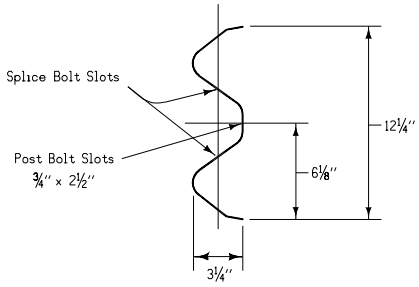

SECTION THRU RAIL

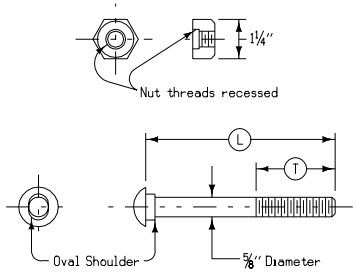

DETAILS OF HARDWARE 7

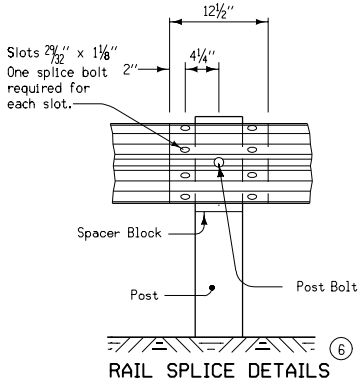

6

RAIL SPLICE DETAILS

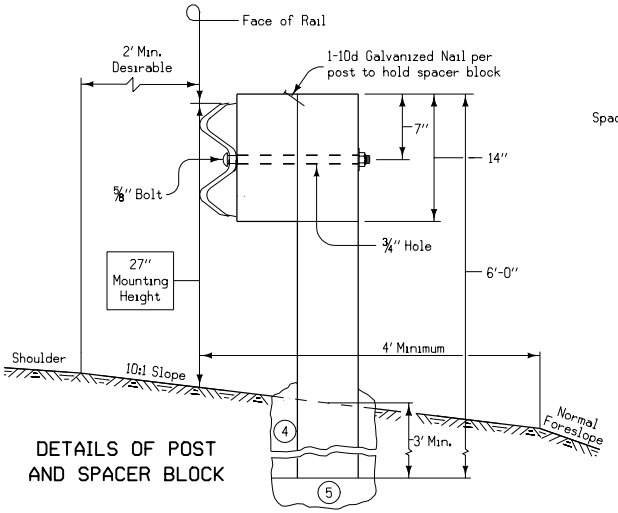

DETAILS OF POST AND SPACER BLOCK

Wood Post	T	L
8" Single Spacer	2½"	18"
8" Double Spacer	2"	25"
Splice Bolt	1 1/16"	1¼"

3 L=Min. Length of Bolt
T=Min. Thread Length

1. Unless specified otherwise, rail elements may be furnished in either 25' or 12'-6" sections.
2. 3'-1 1/2" spacing may be required where space for guardrail deflection is limited. Refer to Standard Road Plans for specific requirements.
3. For any case requiring bolt other than as indicated, the bolt lengths shall be of proper length to accomplish the intended purpose.
4. When guardrail posts are to be installed in HMA or PCC shoulders, the Contractor will be required to predrill or cut holes of equal diameter for post. Where drilled post holes are used, they shall be backfilled and tamped with material removed from the holes unless specified otherwise.
5. Any over-depth portion of hole shall be backfilled with sand and firmly tamped.
6. Splice lap direction shall be as specified on detail project plans and appropriate Standard Road Plans.
7. Bolts shall conform to requirements of ASTM F-1554, Grade 55. Nuts shall conform to requirements of ASTM A-563 DH. These materials shall be galvanized in compliance with ASTM A-153, Class C.

GENERAL NOTES

Details hereon cover typical requirements for the installation of formed steel beam guardrail on wooden posts. Sections of beam rail, and all hardware necessary for its installation shall be in accordance with current Standard Specifications and as detailed hereon. Refer to "Tabulation of Guardrail Installations", "Tabulations of Delineators and Object Markers," and applicable Standard Road Plans for additional details regarding installation of guardrail, end treatment, and delineation and object marker placement.

The installation line shall be specified for each installation. The mounting height shall be determined by establishing a smooth profile for the guardrail with no abrupt breaks in either horizontal or vertical alignment, with a normal mounting height for the guardrail of 27" above the ground.

Post spacing shall be 6'-3" C-C unless otherwise specified as part of project plans. Where detail plans call for guardrail to be installed so that normal post spacing cannot be used, the rail may be cutoff, unless specified otherwise, or additional holes drilled as necessary. Affected portions of the rail shall be repaired as directed by the Engineer.

Posts and spacer blocks are 6"x 8". Posts shall be furnished with one or two spacer blocks as specified in detail plans along with appropriate hardware for the type of post installed. Where post size other than 6"x 8" are specified, the applicable details for such posts shall be similar to those indicated hereon.

All beam rail installed on curvilinear alignment of a radius less than 150 feet shall be shop curved to the proper radius by the fabricator.

A splice in the beam railing shall occur only at a post location. The Engineer may modify the length of beam railing or number of posts required. Any such adjustment shall be compensated for at the contract price.

The plan intent is to provide a 10:1 approach slope from the edge of the shoulder to the guardrail.

When the removal of traffic markers, barriers or warning devices is necessary for proper installation of guardrail or end anchorage, they shall be removed at the direction of the Engineer. Removal of these devices shall require temporary warning markers, provided by the Contractor, if not reinstalled on the same day as construction begins.

Iowa Department of Transportation
Highway Division

STANDARD ROAD PLAN | **RE-12A**

REVISION: Changed ACC to HMA and changed post size from 8" x 8" to 6" x 8"

REVISION NO. 5

REVISION DATE 10-02-01

William G. Stein
APPROVED BY DESIGN METHODS ENGINEER

FORMED STEEL BEAM GUARDRAIL AND POSTS FOR BLOCKED-OUT GUARDRAIL (W-BEAM)