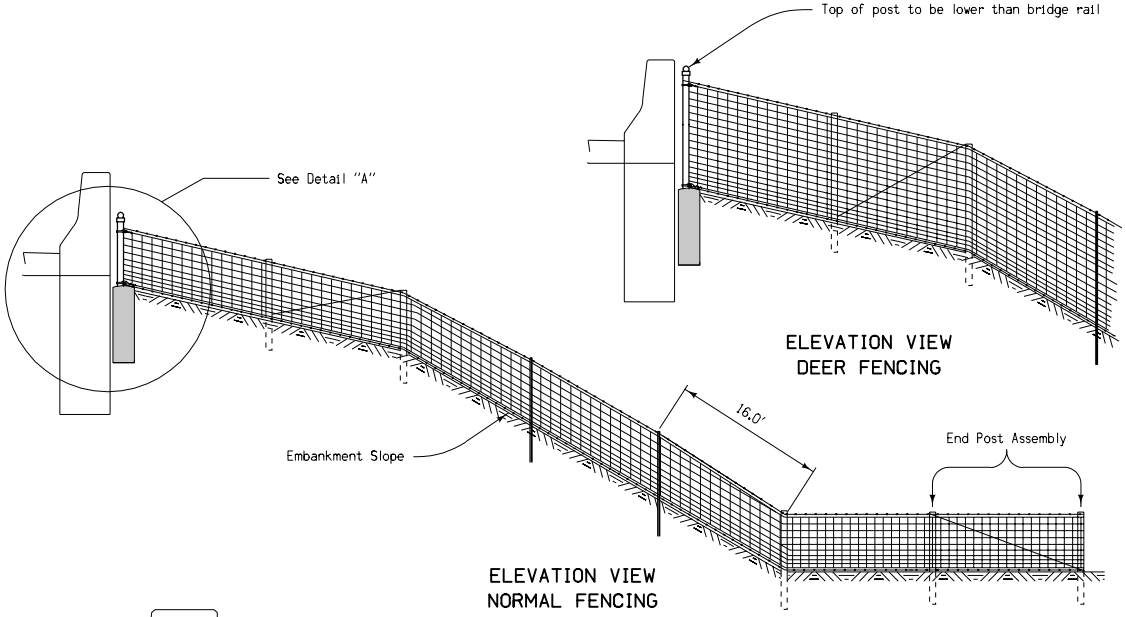

ELEVATION VIEW
DEER FENCING

ELEVATION VIEW
NORMAL FENCING

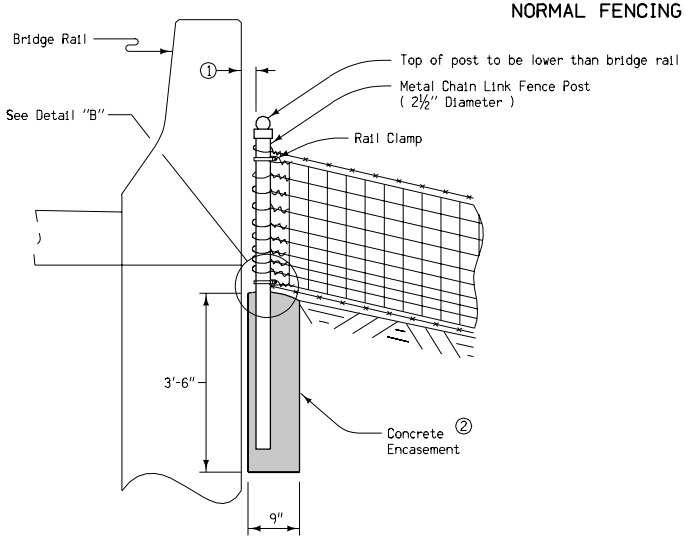

PARTIAL ELEVATION VIEW
DETAIL "A"

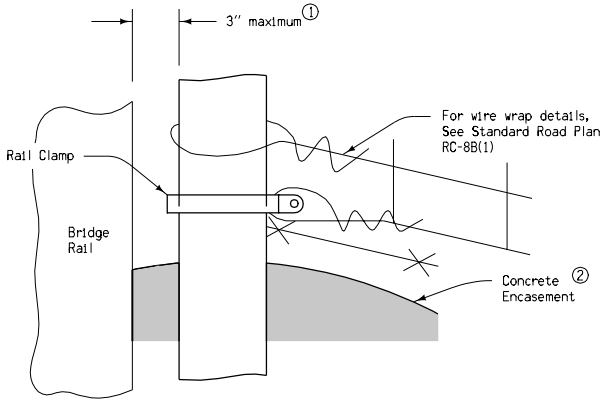

DETAIL "B"

GENERAL NOTES:

This plan illustrates construction details for field fence and deer fence termination at bridges.

Fence termination at bridges as detailed hereon shall not be paid for separately but shall be included with and considered incidental to the bid item "Field Fence" or "Deer Fence".

① Position post so distance between post and bridge rail does not exceed 3".

② Volume of concrete encasement is 1.5 cu. feet, or approximately four 50lb. bags of commercial concrete mix.

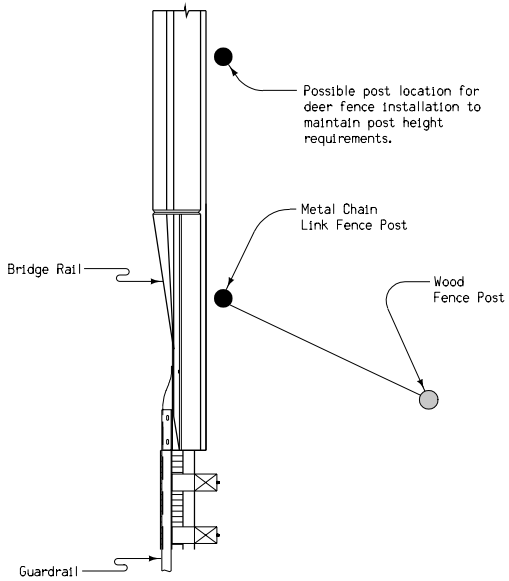

PLAN VIEW

Iowa Department of Transportation
Highway Division

STANDARD ROAD PLAN | **RC-9B**

REVISION: Added Signature

REVISION NO. 1

REVISION DATE 10-29-02

William J. Stein
APPROVED BY DESIGN METHODS ENGINEER

FENCE TERMINATION
AT BRIDGES