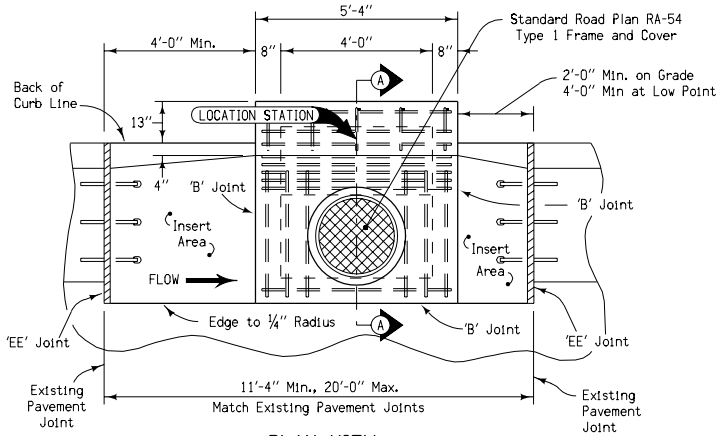

PLAN VIEW

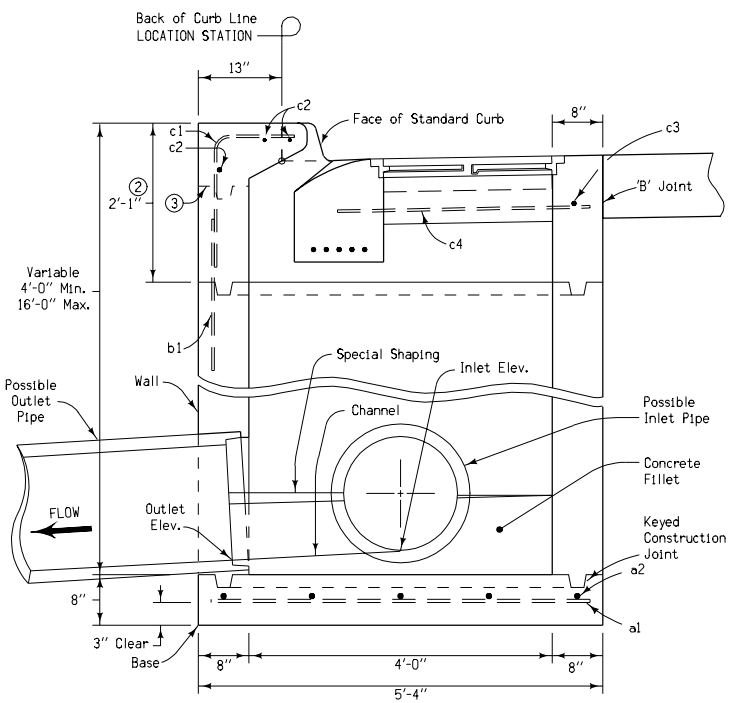

SECTION A-A

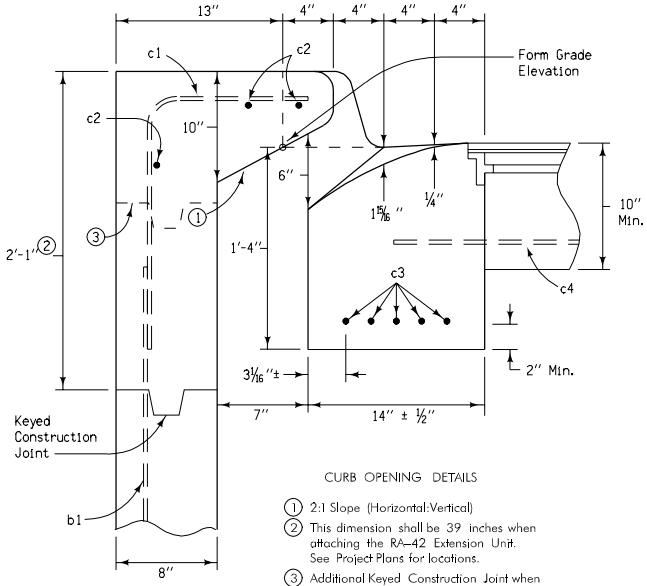

CURB OPENING DETAILS

1. 2:1 Slope (Horizontal:Vertical)
2. This dimension shall be 39 inches when attaching the RA-42 Extension Unit. See Project Plans for locations.
3. Additional Keyed Construction Joint when attaching the RA-42 Extension Unit.

Placing sequence: 1. Base; 2. Walls; 3. Top; 4. Insert

REINFORCING BAR LIST

BAR	SIZE	LOCATION	SHAPE	NO.	LENGTH	WEIGHT	SPACING
a1	4	Base	———	5	5'-0"	17	14"
a2	4	Base	———	5	5'-0"	17	14"
b1	4	Wall	———	5	3'-0"	10	14"
c1	4	Top	⌐	5	2'-8"	9	14"
c2	4	Top	———	3	5'-0"	10	See Detail
c3	4	Top	———	6	5'-0"	20	See Detail
c4	4	Top	———	6	3'-4"	13	See Detail
					Total	96 lbs.	

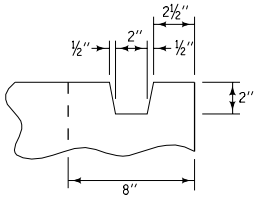

KEYED CONSTRUCTION JOINT DETAIL

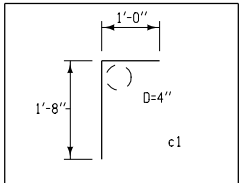

BENT BAR DETAIL

GENERAL NOTES:

This detail illustrates the construction and installation of a curb intake for use with storm sewer located under the pavement.

All reinforcing bars shall be ASTM A 615M, Grade 60.

Precast concrete units with these dimensions may be utilized. The Contractor shall be responsible for any additional reinforcement necessary to prevent cracking during transportation and installation.

Dimensions shown hereon are for the construction of a 6 inch Standard Curb as a part of the pavement. Modifications may be made to conform to other curb shapes and intake designs when necessary, subject to the approval of the Engineer.

If unit is cast in place, storm sewer pipe shall be installed before intake sidewall construction is started. Sidewalls shall be constructed as indicated with openings for storm sewer pipe(s) smoothly shaped and inlet pipe(s) not projecting unnecessarily into well. Outlet pipe(s) shall not project beyond inside face of sidewall. Storm sewer pipe locations shown hereon are typical. Refer to detail project plans for exact locations.

A concrete fillet shall be placed in the bottom of the intake approximately as indicated. Special shaping of this fillet is required to provide a smooth channel through the intake. Top surface of the fillet shall slope at a rate of approximately 12:1 (Horizontal: Vertical) toward the channel.

Insert area shall be included with the quantities for either concrete pavement or curb and gutter (only when curb and gutter is being added to existing pavement). Special shaping of insert area shall be included with price bid for intake. Concrete for insert area may be either 'Intake' or 'Pavement'. Finish of the insert area shall be the same as for pavement. Finish of the intake top or any exposed portion shall be as required for "Structural Concrete" in current Standard Specifications.

Joints in pavement adjacent to intake shall be as shown on Standard Road Plans RH-50, RH-51, and RH-52. Joint locations shall be as indicated hereon except where specifically modified by other plan drawings or by the Engineer.

Price bid for "Intake RA-41" shall include:

A. All necessary excavation and backfill.
B. Satisfactory connection to new or existing storm sewer as per detail plans. Connections to precast units shall be grouted.
C. Furnishing all materials and constructing insert as detailed.
D. Furnishing all materials and constructing intake as detailed.

Iowa Department of Transportation
Highway Division

STANDARD ROAD PLAN | **RA-41**

REVISION: Require concrete fillet. Corrected minimum length boxout.

REVISION NO. 2

REVISION DATE 04-15-03

William G. Stein
APPROVED BY DESIGN METHODS ENGINEER

INTAKE
(CURB)