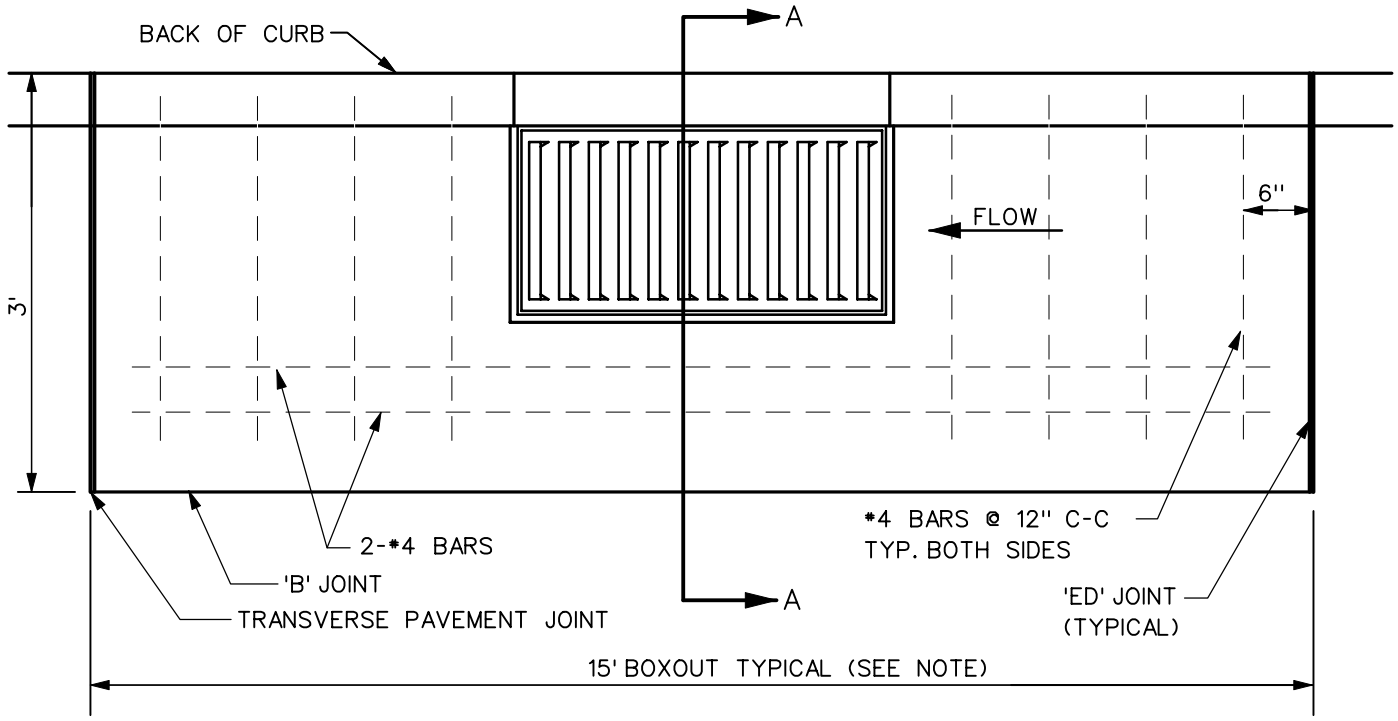

PLAN VIEW

NOTE:
TO BE USED ON
TYPE M-A, M-B
M-C, M-D, AND
M-E INTAKES

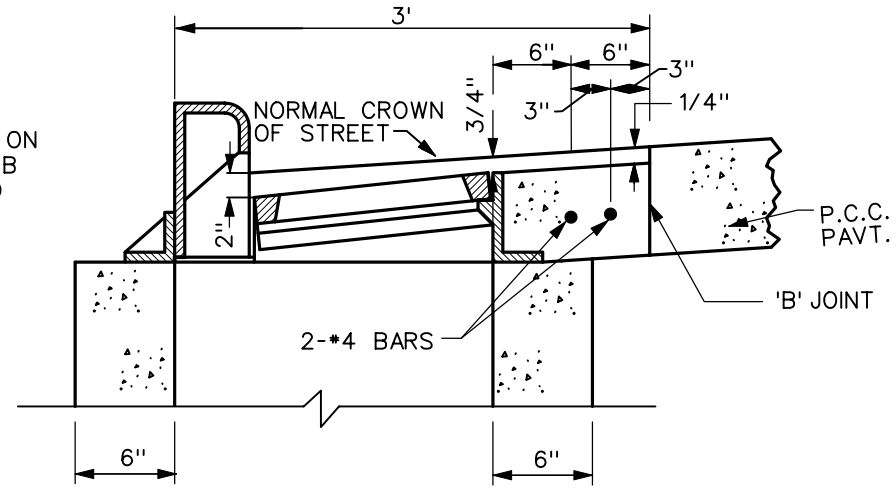

SECTION A-A

NOTE:
TRANSVERSE JOINT SPACING IS CONTROLLED BY THE BOXOUT. ADJACENT JOINT SPACING MAY NEED TO BE FIELD ADJUSTED TO FIT BOXOUTS.

SEE SHEETS 2,3, & 4 FOR ADDITIONAL DETAILS.

REV.	DATE	BY
3	10/21/03	

DATE: 01-01-98

GRATE INTAKE BOXOUT FOR P.C.C. PAVEMENT

FIGURE: 6030.16

SHEET 1 OF 4

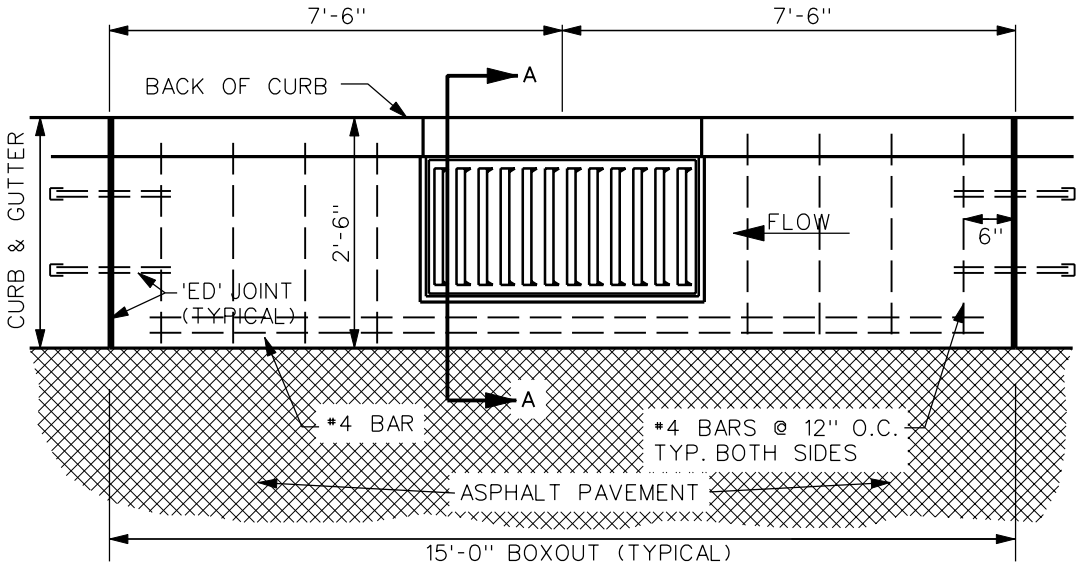

STANDARD BOXOUT - PLAN VIEW

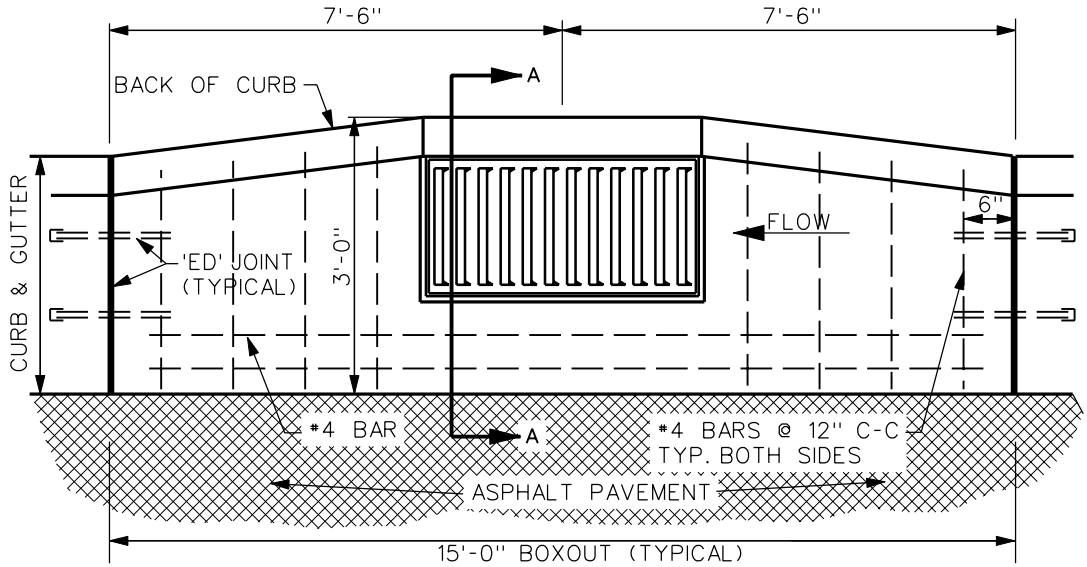

ALTERNATE BOXOUT - PLAN VIEW

NOTE

TO BE USED ON TYPE M-A, M-B, M-C, M-D, AND M-E INTAKES

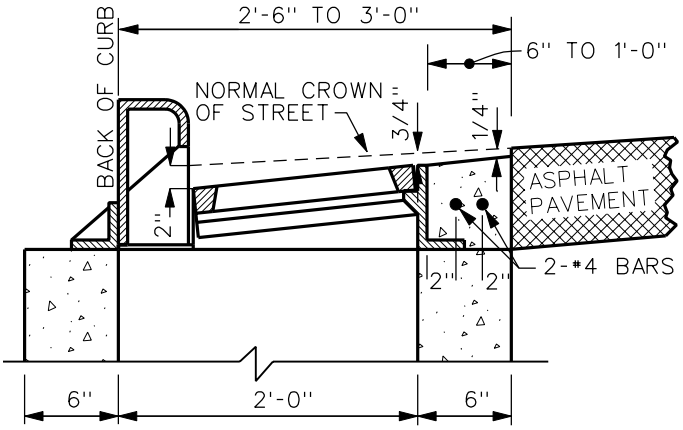

SECTION A-A

4	10/18/05		GRATE INTAKE BOXOUT FOR PCC CURB AND GUTTER UNIT WITH HMA PAVEMENT	FIGURE: 6030.16
REV.	DATE	BY		
DATE: 01-01-98				SHEET 2 OF 4

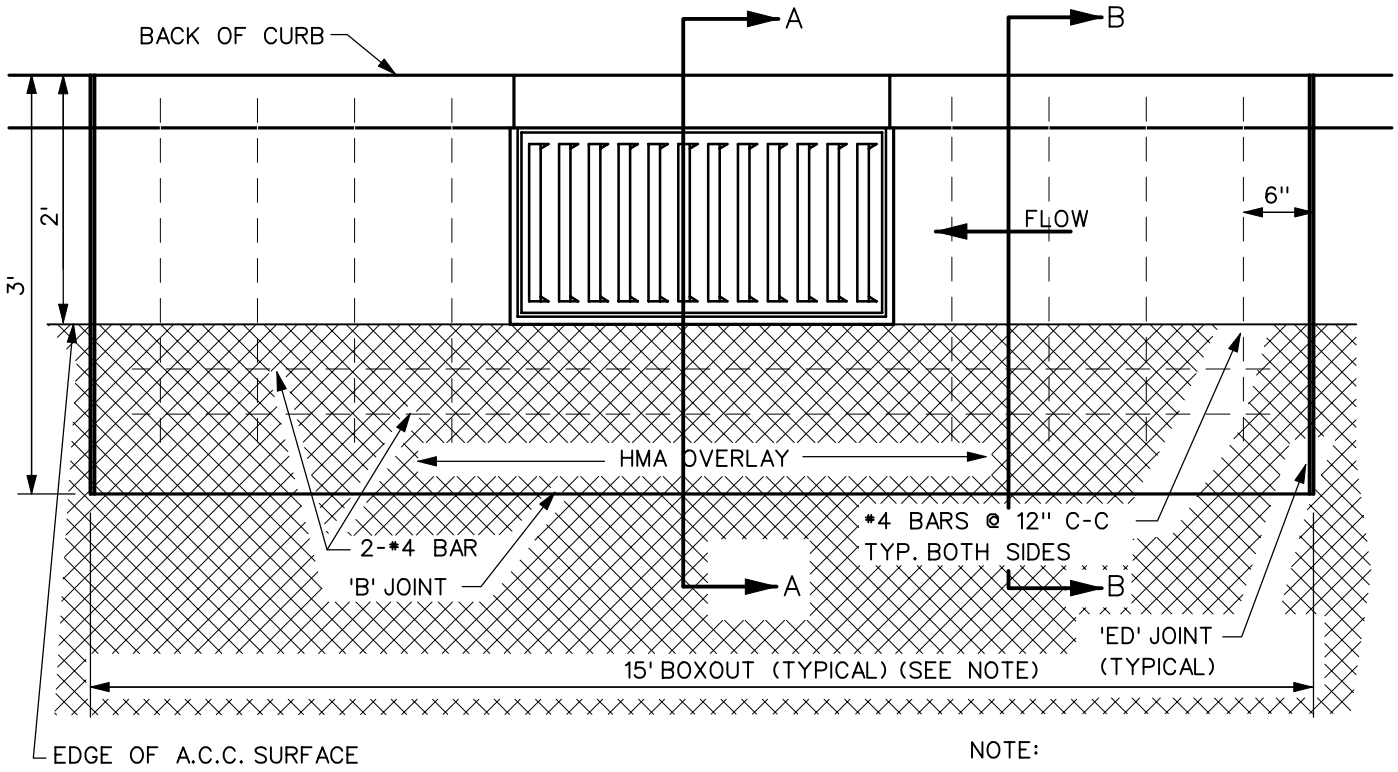

PLAN VIEW

NOTE:
TRANSVERSE JOINT SPACING IS CONTROLLED BY THE BOXOUT. ADJACENT JOINT SPACING MAY NEED TO BE ADJUSTED TO FIT BOXOUTS.

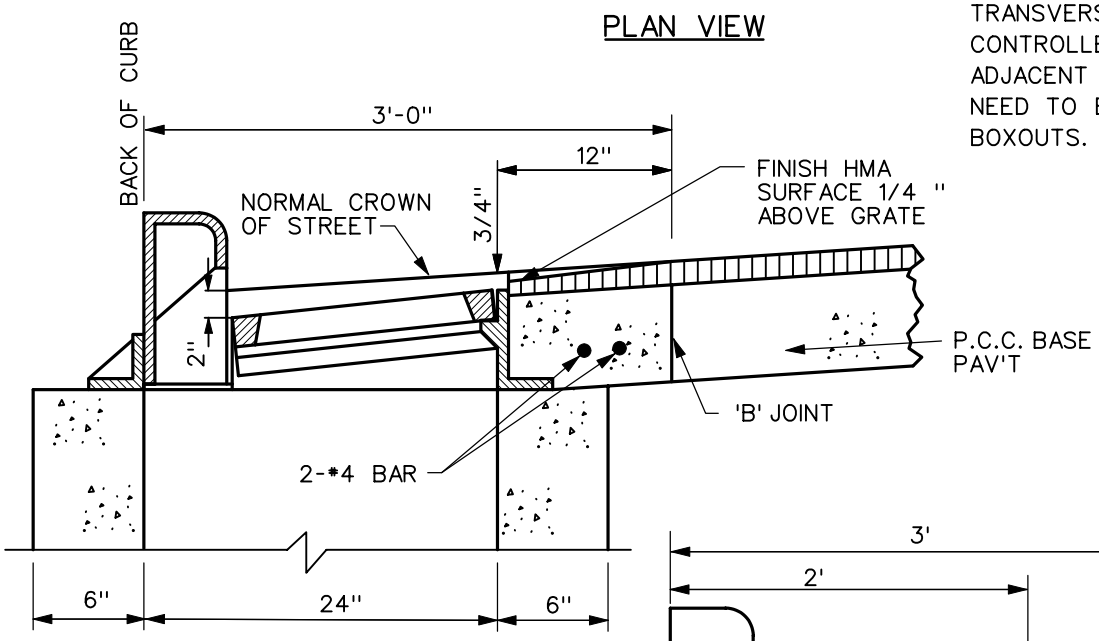

SECTION A-A

NOTE
TO BE USED ON TYPE M-A, M-B, M-C, M-D, AND M-E INTAKES

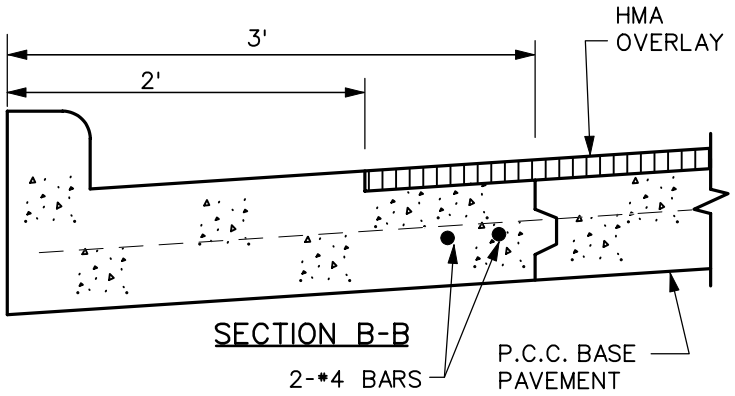

SECTION B-B

REV.	DATE	BY
3	10/21/03	

DATE: 01-01-98

GRATE INTAKE BOXOUT FOR 2' P.C.C. CURB AND GUTTER UNIT WITH P.C.C. BASE & HMA SURFACE

FIGURE: 6030.16

SHEET 3 OF 4

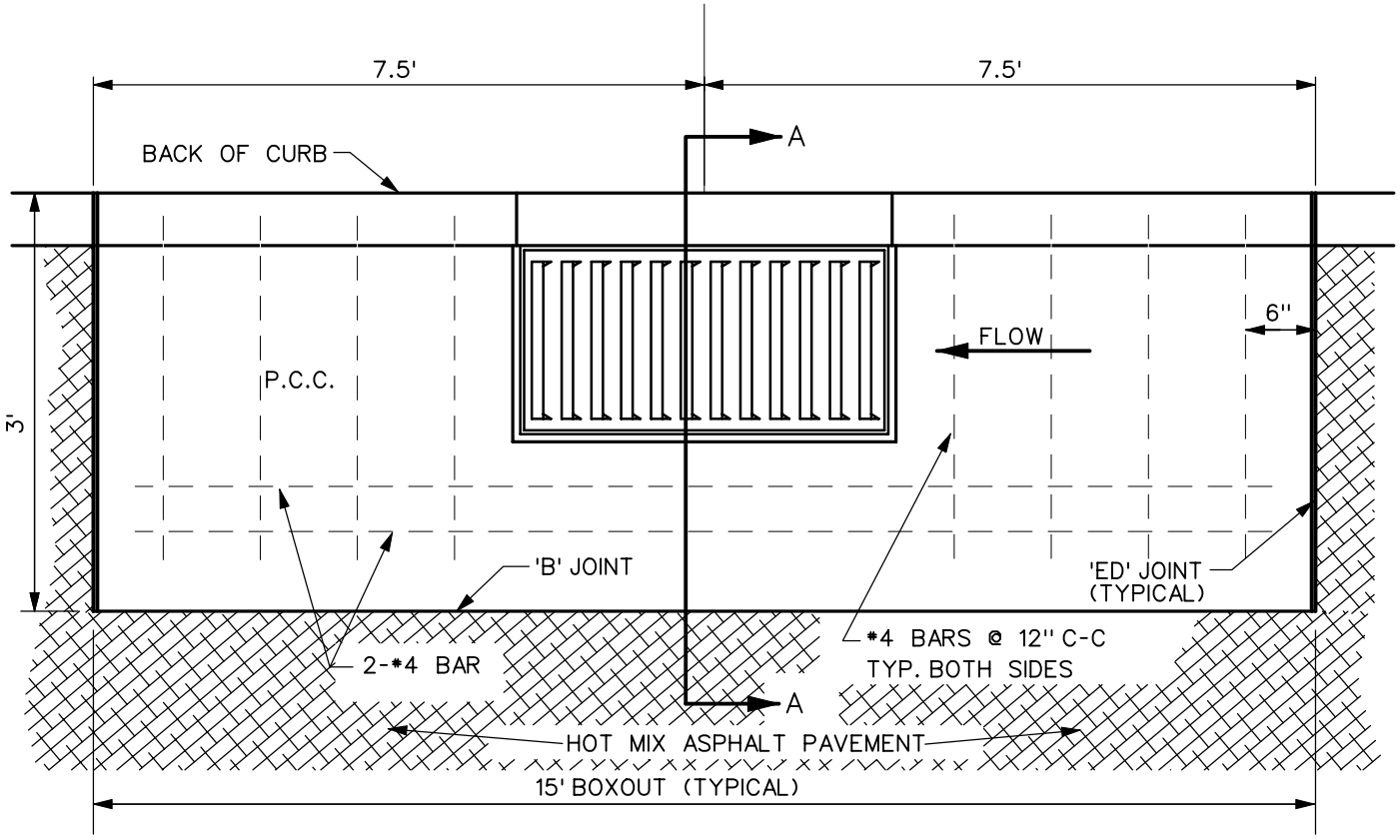

PLAN VIEW

NOTE
TO BE USED ON TYPE M-A, M-B, M-C, M-D, AND M-E INTAKES

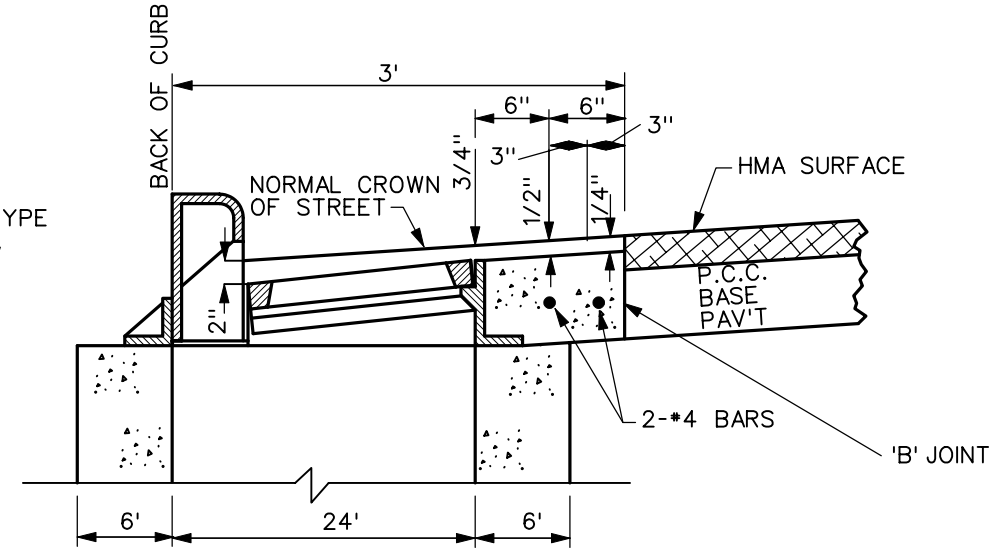

SECTION A-A

REV.	DATE	BY		
2	10/21/03			
DATE: 01-01-98			GRATE INTAKE BOXOUT FOR P.C.C. BASE PAVEMENT WITH HMA SURFACE	FIGURE: 6030.16
				SHEET 4 OF 4