1. Trowel smooth and place 2 layers of 13.6 kg. roofing felt to prevent bond.
2. Cast frame into intake top. See Standard Road Plan RA-66D for frame and grate details.
3. 920 mm maximum concrete pipe.
4. Intake base is precast, it shall be placed on a 150 mm bed of sand. This bedding shall be compacted and provide uniform support for the entire area of the base and shall extend 305 mm outside the edge of the base.
5. Top elevation of grates shall be 6 mm below Form Grade Elevation.
6. Possible subdrain. See plans for location and elevation. See Standard Road Plan RF-19C for connection details.
7. Slope of top shall vary to match elevation of adjacent pavement.
8. Intake base may be cast in place or precast. If precast, the base and first wall section may be cast separately with a keyway or as one unit.

Steps, when specified, shall meet the requirements of ASTM C478. The top step shall be located a maximum of 711 mm below the form grade elevation.

Contract Items:

Barrier Intake, RA-48A

Tabulation: 104-5B

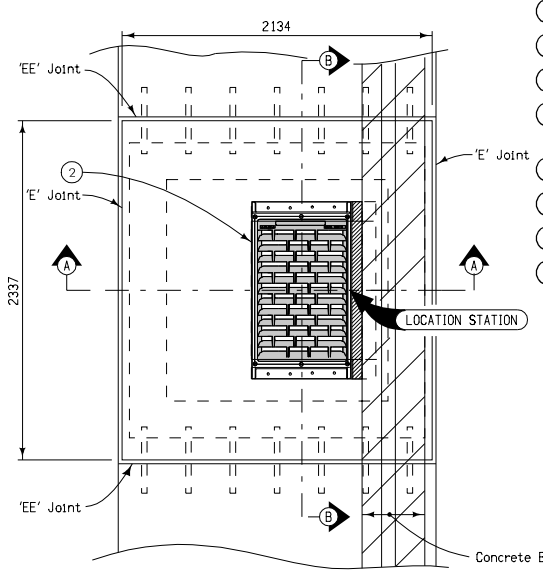

PLAN VIEW

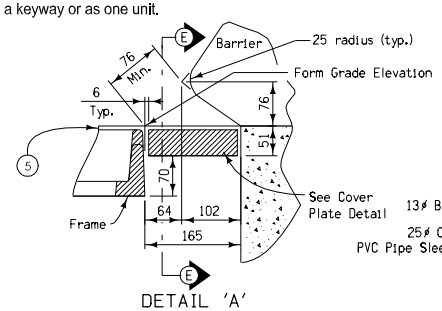

DETAIL 'A'

Remove cover plate before constructing concrete barrier.

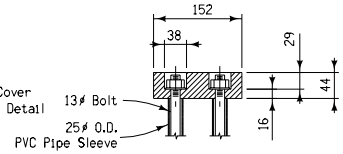

SECTION D-D

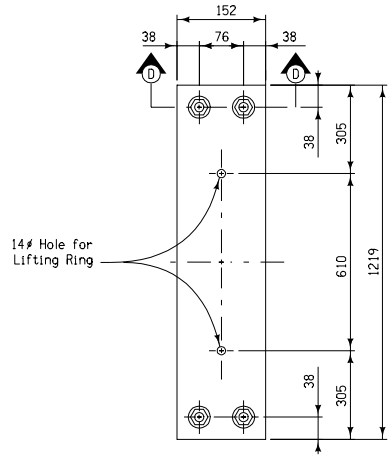

COVER PLATE DETAIL

All Plate steel to be ASTM A36, galvanized after fabrication.

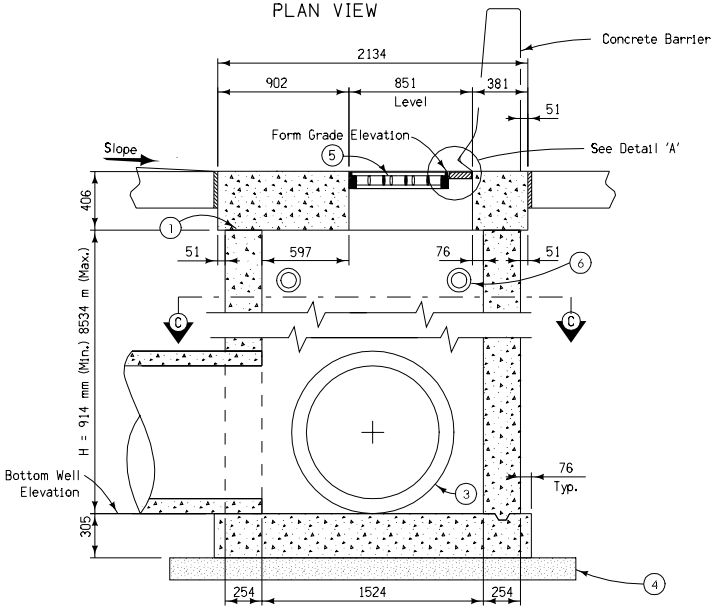

SECTION A-A

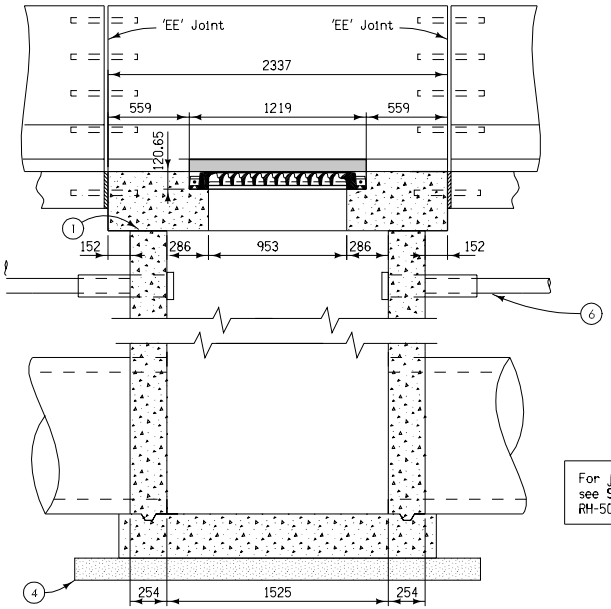

SECTION B-B

For joint details, see Standard Road Plans RH-50, RH-51, and RH-52.

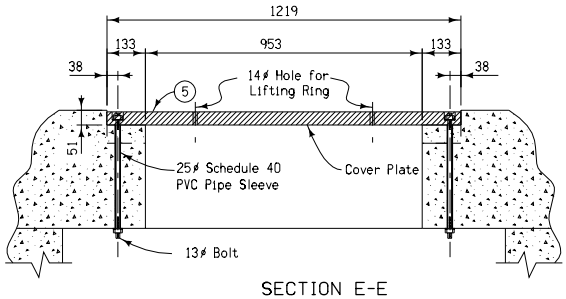

SECTION E-E

All dimensions given in millimeters unless noted.

M

METRIC VERSION

Iowa Department of Transportation
Highway Division

STANDARD ROAD PLAN | **RA-48A(1)**

REVISION: NEW.

REVISION NO.	REVISION DATE
NEW	04-18-06

Deanna Maifield
APPROVED BY DESIGN METHODS ENGINEER

SINGLE GRATE
BARRIER INTAKE, RECTANGULAR

(Sheet 1 of 4)