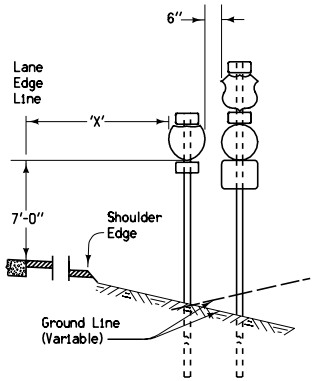


**FRONT VIEW**
**ROUTE DIRECTION MARKER**
Type 1 Installation

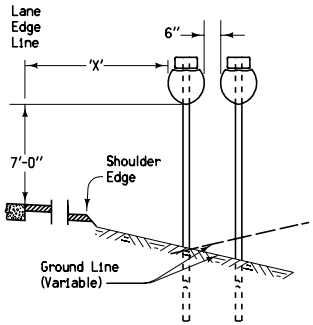


**FRONT VIEW**
**DUAL CONFIRMATION**
Type 1 Installation

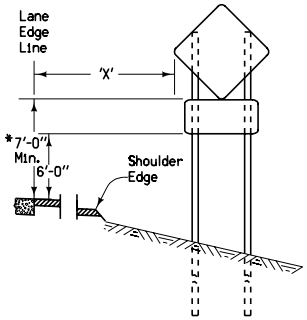


**FRONT VIEW**
**WARNING SIGN**
**WITH ADVISORY PLATE**
* Without Advisory Plate
Type 1 Installation

See "Summary of Materials for Type 'A' Signs" and the Sign Type and Location Plan Sheets for data regarding specific sign assemblies.

Final location of signs shall be at the discretion of the Engineer.

WOOD POST INFORMATION

The number and size of wood posts required shall be determined from the table below, based on the total active sign area.

The 'Total Active Sign Area' shall be defined as the sum of the areas of the individual signs erected at a single location as a single post or two-post installation, excluding the equal or smaller area of any pair of signs mounted back to back.

| Total Active Sign Area (Sq. Ft.) | Sign Installation Width at Widest Point (Ft.) | Post Requirements | |
|---|---|---|---|
| | | Number of Posts | Type of Posts |
| 0 - 10 | 0 - 4 | 1 | 4 x 4 |
| 10 - 20 | 0 - 4 | 1 | 4 x 6 |
| 0 - 20 | over 4 | 2 | 4 x 4 |
| 20 - 50 | all | 2 | 4 x 6 |

Use the Type 1 installation in any case except where:

(A) Otherwise specified in the plans.

(B) Otherwise directed by the Engineer.

(C) A Type 3 installation is required due to location in an island or gore area.

Minimum embedment of 5 feet is required where wood posts are used.

BREAKAWAY POST INFORMATION

(See Standard Road Plan RD-21A)

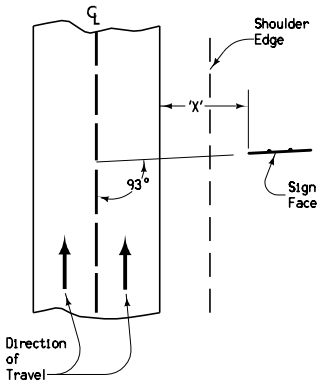


**SIGN ORIENTATION PLAN**

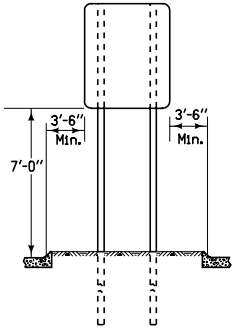


**FRONT VIEW**
**SIGN LOCATION**
Type 3 Installation

Type 3 installation is intended to show the requirements for a Type 'A' sign when installed in an island or median (where traffic passes on both sides of the sign) as well as for locations where the Type 'A' sign is installed adjacent to a curbed roadway (sign may be located on either side of a roadway as specified in project plans).

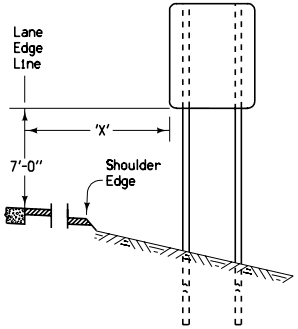


**FRONT VIEW**
**REGULATORY SIGN**
Type 1 Installation

Iowa Department of Transportation

**STANDARD ROAD PLAN**

| REVISION | |
|---|---|
| 2 | 10-16-07 |

**RD-28**
SHEET 1 of 1

REVISIONS: Added notes for wood posts.

Deanna Maifield
APPROVED BY DESIGN METHODS ENGINEER

**LOCATION DETAILS FOR TYPE 'A' SIGNS**