BILL OF REINFORCING STEEL FOR SUPERSTRUCTURE - 90' BRIDGE

LOCATION	SHAPE	BAR	0° NO.	0° LENGTH	0° WEIGHT	15° NO.	15° LENGTH	15° WEIGHT	30° NO.	30° LENGTH	30° WEIGHT	45° NO.	45° LENGTH	45° WEIGHT
SLAB LONGITUDINAL BOTTOM		8a1	58	21'-1	3265	58	21'-1	3265	58	21'-1	3265	58	21'-1	3265
SLAB LONGITUDINAL BOTTOM		8a2	58	30'-3	4685	58	30'-3	4685	58	30'-3	4685	58	30'-3	4685
SLAB LONGITUDINAL BOTTOM		8a3	58	28'-6	4414	58	28'-6	4414	58	28'-6	4414	58	28'-6	4414
SLAB LONGITUDINAL BOTTOM		8a4	58	26'-7	4117	58	26'-7	4117	58	26'-7	4117	58	26'-7	4117
SLAB LONGITUDINAL BOTTOM		8a5	29	28'-0	2168	29	28'-0	2168	29	28'-0	2168	29	28'-0	2168
SLAB LONGITUDINAL BOTTOM, AT RAIL		8a6	8	33'-4	712	8	33'-4	712	8	33'-4	712	8	33'-4	712
SLAB LONGITUDINAL BOTTOM, AT RAIL		8a7	4	34'-4	367	4	34'-4	367	4	34'-4	367	4	34'-4	367
SLAB LONGITUDINAL BOTTOM, AT RAIL		8a8	8	23'-10	509	8	23'-10	509	8	23'-10	509	8	23'-10	509
SLAB LONGITUDINAL BOTTOM, AT RAIL		8a9	4	21'-0	224	4	21'-0	224	4	21'-0	224	4	21'-0	224
SLAB LONGITUDINAL TOP		6b1	58	6'-10	595	58	6'-10	595	58	6'-10	595	58	6'-10	595
SLAB LONGITUDINAL TOP		9b2	58	22'-9	4486	58	22'-9	4486	58	22'-9	4486	58	22'-9	4486
SLAB LONGITUDINAL TOP		9b3	58	33'-10	6672	58	33'-10	6672	58	33'-10	6672	58	33'-10	6672
SLAB LONGITUDINAL TOP		6b4	58	11'-10	1031	58	11'-10	1031	58	11'-10	1031	58	11'-10	1031
SLAB LONGITUDINAL TOP		9b5	58	27'-6	5423	58	27'-6	5423	58	27'-6	5423	58	27'-6	5423
SLAB LONGITUDINAL TOP		6b6	29	16'-10	733	29	16'-10	733	29	16'-10	733	29	16'-10	733
SLAB LONGITUDINAL TOP, AT RAIL		6b8	8	24'-10	298	8	24'-10	298	8	24'-10	298	8	24'-10	298
SLAB LONGITUDINAL TOP, AT RAIL		9b9	8	19'-6	530	8	19'-6	530	8	19'-6	530	8	19'-6	530
SLAB LONGITUDINAL TOP, AT RAIL		6b10	4	18'-0	108	4	18'-0	108	4	18'-0	108	4	18'-0	108
SLAB LONGITUDINAL TOP, AT RAIL		6b11	8	27'-4	328	8	27'-4	328	8	27'-4	328	8	27'-4	328
SLAB LONGITUDINAL TOP, AT RAIL		10b12	8	13'-3	456	8	13'-3	456	8	13'-3	456	8	13'-3	456
SLAB TRANSVERSE BOTTOM		6c1	87	25'-5	3321	87	26'-4	3441	78	25'-5	2978	68	25'-5	2596
SLAB TRANSVERSE BOTTOM		6c2	87	23'-3	3038	87	24'-1	3147	79	23'-3	2759	70	23'-3	2445
SLAB TRANSVERSE ENDS, BOTTOM		6c3	0	-	-	-	-	-	12	VARIES	267	20	VARIES	459
SLAB TRANSVERSE ENDS, BOTTOM		6c4	0	-	-	-	-	-	11	VARIES	255	20	VARIES	434
SLAB TRANSVERSE ENDS, BOTTOM		6c5	0	-	-	-	-	-	11	VARIES	213	19	VARIES	350
SLAB TRANSVERSE ENDS, BOTTOM		6c6	0	-	-	-	-	-	11	VARIES	230	18	VARIES	386
SLAB TRANSVERSE TOP		5d1	87	25'-9	2337	87	26'-8	2420	78	25'-9	2095	68	25'-9	1826
SLAB TRANSVERSE TOP		5d2	87	23'-3	2110	87	24'-1	2185	79	23'-3	1916	70	23'-3	1697
SLAB TRANSVERSE ENDS, TOP		5d3	-	-	-	-	-	-	12	VARIES	186	20	VARIES	319
SLAB TRANSVERSE ENDS, TOP		5d4	-	-	-	-	-	-	11	VARIES	177	20	VARIES	301
SLAB TRANSVERSE ENDS, TOP		5d5	-	-	-	-	-	-	11	VARIES	148	19	VARIES	243
SLAB TRANSVERSE ENDS, TOP		5d6	-	-	-	-	-	-	11	VARIES	160	18	VARIES	268
SLAB, TRANSVERSE AT ABUTMENT		8e1	20	28'-4	1513	20	29'-2	1558	20	31'-9	1696	20	37'-6	2003
SLAB, TRANSVERSE AT ABUTMENT		8e2	20	23'-4	1246	20	24'-1	1286	20	26'-9	1428	20	32'-5	1731
SLAB, HAIRPINS, AT ABUTMENT		6e3	100	6'-10	1026	100	6'-11	1039	100	7'-3	1089	100	7'-11	1189
PIER CAP HOOPS		5h1	80	7'-3	605	80	7'-3	605	80	7'-3	605	120	7'-3	907
PIER CAP ENDS		8h2	4	14'-5	154	4	14'-5	154	4	14'-5	154	4	14'-5	154
PIER CAP, BOTTOM LONGITUDINAL		8h3	8	27'-5	586	8	28'-8	612	8	31'-8	676	8	37'-10	808
PIER CAP, BOTTOM LONGITUDINAL		8h4	8	21'-11	468	8	22'-4	477	8	24'-6	523	8	29'-8	634
PIER CAP, TOP LONGITUDINAL		8h5	4	28'-2	301	4	29'-6	315	4	32'-8	349	4	38'-11	416
PIER CAP, TOP LONGITUDINAL		8h6	4	23'-5	250	4	23'-11	255	4	26'-3	280	4	31'-6	336
TOP OF SLAB, TRANSVERSE, AT RAIL		5j1	172	8'-6	1525	172	8'-6	1525	166	8'-6	1472	164	8'-6	1454
WING, VERTICAL		5m1-4	32	SHOWN	117	32	SHOWN	117	32	SHOWN	117	32	SHOWN	117
WING, HORIZONTAL		5n1	24	6'-8	167	24	6'-8	167	24	6'-8	167	24	6'-8	167
PAVING SUPPORT, TRANSVERSE		5p1	44	8'-10	405	46	8'-10	424	50	8'-10	461	62	8'-10	571
PAVING SUPPORT LONGITUDINAL		5p3	6	24'-9	155	6	26'-1	163	6	28'-9	180	6	34'-7	216
PAVING SUPPORT LONGITUDINAL		5p4	6	22'-0	138	6	22'-10	143	6	25'-5	159	6	31'-1	195
SUB TOTAL - LBS.					60,583			61,154			61,861			63,343
BARRIER RAIL - SEE LIST ON RAIL SHEET J44-46-06					5642			5642			5642			5642
OPEN RAIL - SEE LIST ON RAIL SHEET J44-49-06					5907			5907			5907			5907
TOTAL - LBS. WITH MONOLITHIC PIER CAP		WITH BARRIER RAIL			66,225			66,796			67,503			68,985
		WITH OPEN RAIL			66,490			67,061			67,768			69,250
TOTAL - LBS. WITH NON-MONOLITHIC PIER CAP		WITH BARRIER RAIL			63,861			64,378			64,916			65,730
SAME AS ABOVE EXCEPT ALL "h" BARS DELETED		WITH OPEN RAIL			64,126			64,643			65,181			66,995

BENT BAR DETAILS

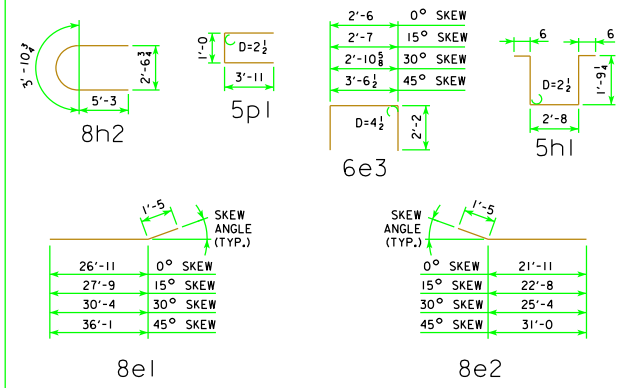

NOTE: ALL DIMENSIONS ARE OUT TO OUT. D = PIN DIAMETER.

NOTES:

ALL REINFORCING STEEL SHALL BE EPOXY COATED.

THE TRANSVERSE REBARS ARE DETAILED WITH A SPLICE LAP. AT THE CONTRACTOR'S OPTION, THIS LAP MAY BE ELIMINATED BY FURNISHING FULL LENGTH BARS WITH NO REDUCTION IN PAY WEIGHT FOR SAME.

ESTIMATED QUANTITIES FOR SUPERSTRUCTURE - 90' BRIDGE

ITEM		SKEW	WITH MONOLITHIC PIER CAP 0°	15°	30°	45°	WITH NON-MONOLITHIC PIER CAP 0°	15°	30°	45°
WITH BARRIER RAIL	*STRUCTURAL CONCRETE (BRIDGE)	C.Y.	259.7	261.2	266.3	277.5	253.3	254.6	259.0	268.6
	REINFORCING STEEL EPOXY COATED	LBS.	66,225	66,796	67,503	68,985	63,861	64,378	64,916	65,730
	CONCRETE BARRIER OR OPEN RAIL	LIN. FT.	202.0	202.2	202.9	204.5	202.0	202.2	202.9	204.5
WITH OPEN RAIL	*STRUCTURAL CONCRETE (BRIDGE)	C.Y.	259.5	261.0	266.1	277.3	253.1	254.4	258.8	268.4
	REINFORCING STEEL EPOXY COATED	LBS.	66,490	67,061	67,768	69,250	64,126	64,643	65,181	66,495

* INCLUDES 4 WINGS @ 0.71 C.Y. EACH; EXCLUDES RAIL CONCRETE.

REVISED 12-07 - OPEN RAIL REINFORCING QUANTITY CHANGED

12-07
LATEST REVISION DATE

APPROVED BY BRIDGE ENGINEER

Iowa Department of Transportation
Highway Division

STANDARD DESIGN - 44' ROADWAY, 3 SPAN BRIDGES

CONTINUOUS CONCRETE SLAB BRIDGES

NOVEMBER, 2006

SUPERSTRUCTURE DETAILS
90'-0 BRIDGE

J44-07-06