BENT BAR DETAILS

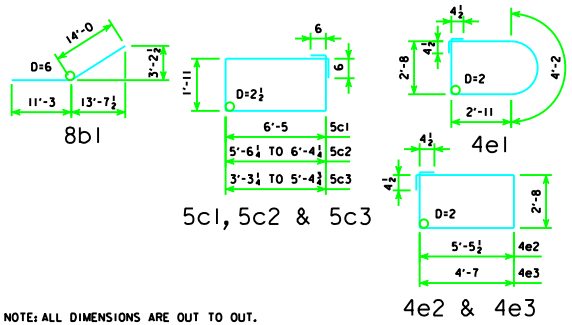

NOTE: ALL DIMENSIONS ARE OUT TO OUT.
D = PIN DIAMETER.

CAP

REINFORCING STEEL			138'-10			151'-4			163'-10			176'-4			188'-10			201'-4			213'-10			226'-4			243'-0		
℄ - ℄ ABUT. BEARINGS																													
BAR	LENGTH	SHAPE	NO.	SIZE	WEIGHT	NO.	SIZE	WEIGHT	NO.	SIZE	WEIGHT	NO.	SIZE	WEIGHT	NO.	SIZE	WEIGHT	NO.	SIZE	WEIGHT	NO.	SIZE	WEIGHT	NO.	SIZE	WEIGHT	NO.	SIZE	WEIGHT
a1	47'-8		6	10	1231	6	10	1231	6	10	1231	6	10	1231	6	10	1231	6	11	1520	6	11	1520	6	11	1520	6	11	1520
a2	47'-8		6	9	972	6	9	972	6	9	972	6	10	1231	6	10	1231	6	10	1231	6	11	1520	6	11	1520	6	11	1520
6a3	47'-8		6	6	430	6	6	430	6	6	430	6	6	430	6	6	430	6	6	430	6	6	430	6	6	430	6	6	430
6a4	VARIES		6	6	342	6	6	342	6	6	342	6	6	342	6	6	342	6	6	342	6	6	342	6	6	342	6	6	342
8b1	25'-3		8	8	539	8	8	539	8	8	539	8	8	539	8	8	539	8	8	539	8	8	539	8	8	539	8	8	539
5c1	17'-8		30	5	553	30	5	553	30	5	553	30	5	553	30	5	553	30	5	553	30	5	553	30	5	553	30	5	553
5c2	VARIES		16	5	280	16	5	280	16	5	280	16	5	280	20	5	349	20	5	349	28	5	489	28	5	489	28	5	489
5c3	VARIES		28	5	394	28	5	394	28	5	394	28	5	394	28	5	394	28	5	394	40	5	563	40	5	563	40	5	563
① TOTAL (LB.)			4741			4741			4741			5000			5069			5358			5956			5956			5956		
STRUCTURAL CONCRETE (CY)			35.8			35.8			35.8			35.8			35.8			35.8			35.8			35.8			35.8		

COLUMN

H IN FEET	COLUMN HEIGHT	STRUCTURAL CONCRETE (CY)	REINFORCING STEEL: a1 BAR				4e1 BAR				4e2 BAR				4e3 BAR				TOTAL WEIGHT (LB.)
			NO.	SIZE	LENGTH	WEIGHT	NO.	SIZE	LENGTH	WEIGHT	NO.	SIZE	LENGTH	WEIGHT	NO.	SIZE	LENGTH	WEIGHT	
16	5'-9	12.4	48	10	9'-3	1911	12	4	13'-5	108	12	4	17'-0	136	12	4	15'-3	122	2277
17	6'-9	14.5	48	10	10'-3	2117	14	4	13'-5	125	14	4	17'-0	159	14	4	15'-3	143	2544
18	7'-9	16.7	48	10	11'-3	2324	16	4	13'-5	143	16	4	17'-0	182	16	4	15'-3	163	2812
19	8'-9	18.8	48	10	12'-3	2530	18	4	13'-5	161	18	4	17'-0	204	18	4	15'-3	183	3078
20	9'-9	21.0	48	10	13'-3	2737	20	4	13'-5	179	20	4	17'-0	227	20	4	15'-3	204	3347
21	10'-9	23.1	48	10	14'-3	2943	22	4	13'-5	197	22	4	17'-0	250	22	4	15'-3	224	3614
22	11'-9	25.3	48	10	15'-3	3150	24	4	13'-5	215	24	4	17'-0	273	24	4	15'-3	244	3882
23	12'-9	27.4	48	10	16'-3	3356	26	4	13'-5	233	26	4	17'-0	295	26	4	15'-3	265	4149
24	13'-9	29.6	48	10	17'-3	3563	28	4	13'-5	251	28	4	17'-0	318	28	4	15'-3	285	4417
25	14'-3	30.6	48	10	17'-9	3666	30	4	13'-5	269	30	4	17'-0	341	30	4	15'-3	306	4582
26	15'-3	32.8	48	10	18'-9	3873	32	4	13'-5	287	32	4	17'-0	363	32	4	15'-3	326	4849
27	16'-3	34.9	48	10	19'-9	4079	34	4	13'-5	305	34	4	17'-0	386	34	4	15'-3	346	5116
28	17'-3	37.1	48	10	20'-9	4286	36	4	13'-5	323	36	4	17'-0	409	36	4	15'-3	367	5385
29	18'-3	39.3	48	10	21'-9	4492	38	4	13'-5	341	38	4	17'-0	432	38	4	15'-3	387	5652
30	19'-3	41.4	48	10	22'-9	4699	40	4	13'-5	358	40	4	17'-0	454	40	4	15'-3	407	5918
31	20'-3	43.6	48	10	23'-9	4905	42	4	13'-5	376	42	4	17'-0	477	42	4	15'-3	428	6186
32	21'-3	45.7	48	10	24'-9	5112	44	4	13'-5	394	44	4	17'-0	500	44	4	15'-3	448	6454
33	22'-3	47.9	48	10	25'-9	5319	46	4	13'-5	412	46	4	17'-0	522	46	4	15'-3	469	6722
34	23'-3	50.0	48	10	26'-9	5525	48	4	13'-5	430	48	4	17'-0	545	48	4	15'-3	489	6989
35	24'-3	52.2	48	10	27'-9	5732	50	4	13'-5	448	50	4	17'-0	568	50	4	15'-3	509	7257
36	25'-3	54.3	48	10	28'-9	5938	52	4	13'-5	466	52	4	17'-0	591	52	4	15'-3	530	7525
37	26'-3	56.5	48	10	29'-9	6145	54	4	13'-5	484	54	4	17'-0	613	54	4	15'-3	550	7792
38	27'-3	58.6	48	10	30'-9	6351	56	4	13'-5	502	56	4	17'-0	636	56	4	15'-3	570	8059
39	28'-3	60.8	48	10	31'-9	6558	58	4	13'-5	520	58	4	17'-0	659	58	4	15'-3	591	8328
40	29'-3	62.9	48	10	32'-9	6764	60	4	13'-5	538	60	4	17'-0	681	60	4	15'-3	611	8594

PIER NOTES:

SEE "TEE PIER NOTES" ON H40-01-06 FOR NOTES REGARDING APPLICATION OF THESE PIER STANDARDS.

MINIMUM CLEAR DISTANCE FROM FACE OF CONCRETE TO NEAR REINFORCING BAR SHALL BE 2 INCHES UNLESS OTHERWISE NOTED OR SHOWN.

ELIMINATE 2x8 BEVELED KEYWAY ON TOP OF CAP FOR EXPANSION PIERS.

SEE SHEET H40-22-06 FOR "U" DIMENSION.

① SEE SHEET H40-24-06 FOR STEP REINFORCING STEEL QUANTITIES AND DETAILS.

LATEST REVISION DATE

APPROVED BY BRIDGE ENGINEER

Iowa Department of Transportation
Highway Division

STANDARD DESIGN - 40' ROADWAY, THREE SPAN BRIDGE

PRETENSIONED PRESTRESSED CONCRETE BEAM BRIDGES

HL93 SUPERSTRUCTURE DECEMBER, 2006 HS25 SUBSTRUCTURE

TEE PIER CAP AND COLUMN
30° SKEW

H40-66-06