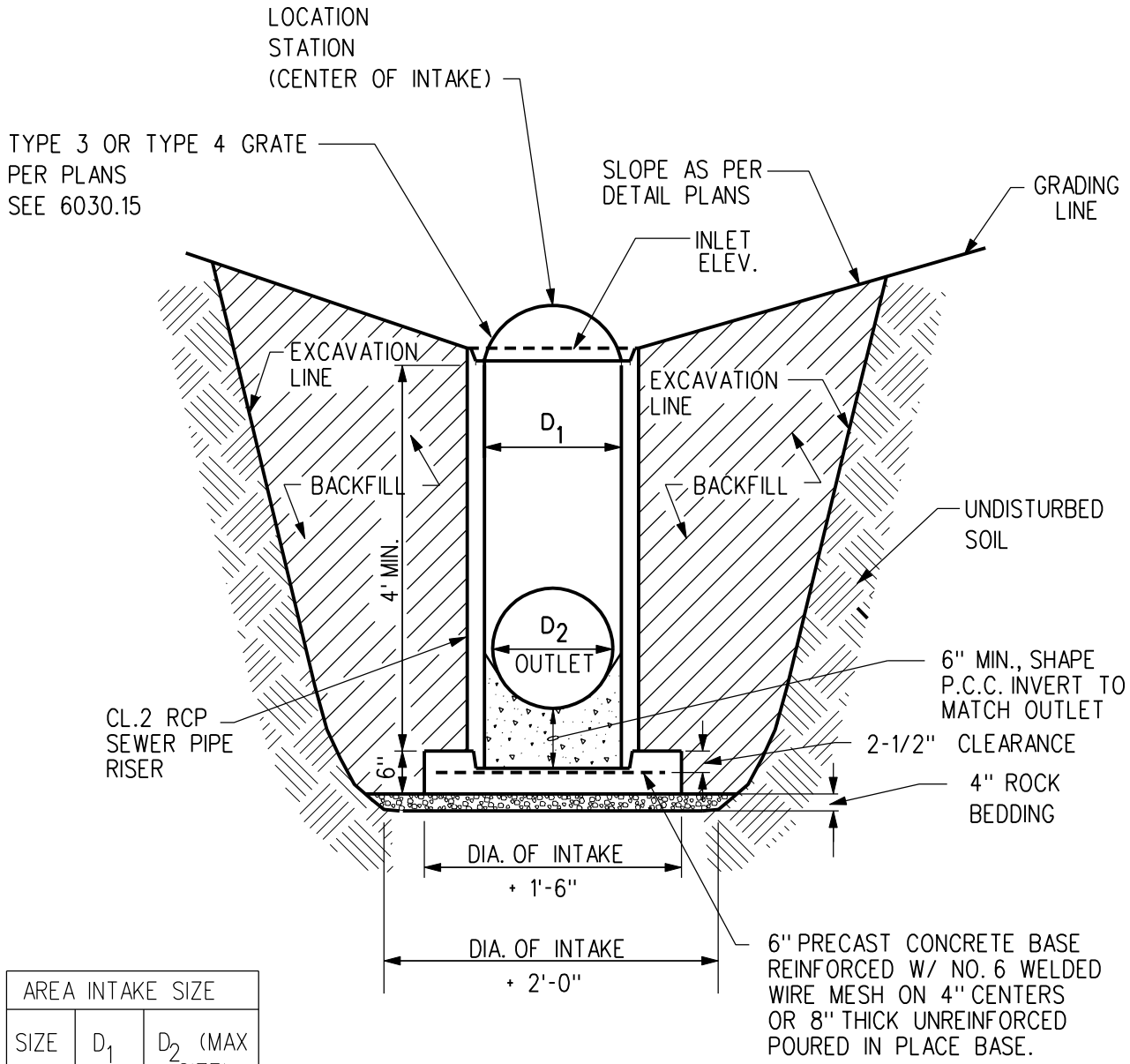

SECTION VIEW

AREA INTAKE SIZE		
SIZE	D_1	D_2 (MAX SIZE)
18"	18"	15"
24"	24"	18"
30"	30"	24"
36"	36"	30"

REV.	DATE	BY		
3	10/21/03		TYPE "RCP AREA" INTAKE	FIGURE: 6030.11
DATE: 01-01-98				SHEET 1 OF 1