REV.	DATE	BY
1	01/25/99	

DATE: 01-01-98

CURTAIN WALL DETAILS FOR 36" CULVERT

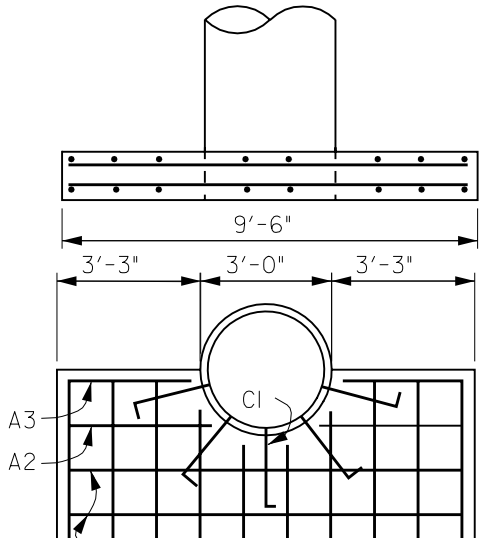

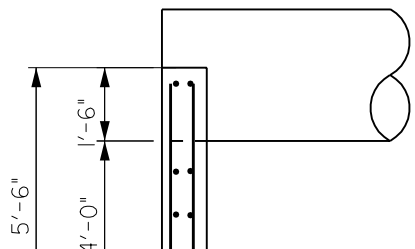

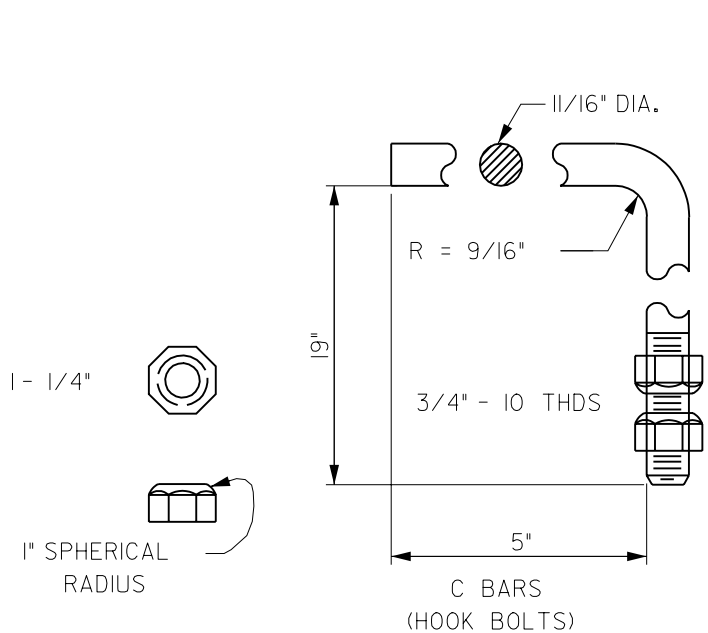

REINFORCING STEEL		
LOCATION	BAR	LENGTH
HORIZ. BF & FF	4A1	9'-0"
HORIZ. BF & FF	4A2	3'-3"
HORIZ. BF & FF	4A3	2'-9"
VERT. BF & FF	4B1	5'-0"
VERT. BF & FF	4B2	4'-3"
VERT. BF & FF	4B3	3'-6"

NOTE:

STEEL SPACING AT 1'0" CENTERS.
HOOK BOLTS AND NUTS SHALL BE GALVANIZED.
CLEAR DISTANCE FROM FACE OF CONCRETE TO NEAR STEEL SHALL BE 3".

FIGURE: 4020.4B