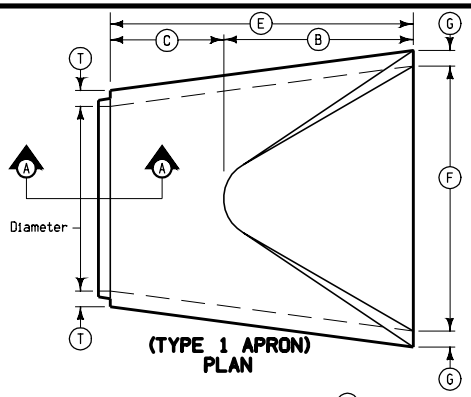

(TYPE 1 APRON)
PLAN

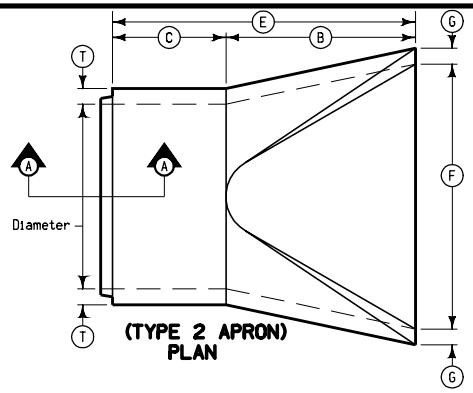

(TYPE 2 APRON)
PLAN

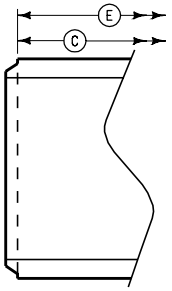

SECTION A-A
TONGUE END DETAIL (1)

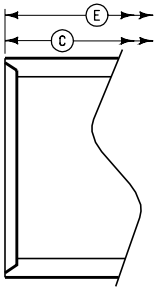

SECTION A-A
GROOVE END DETAIL (1)

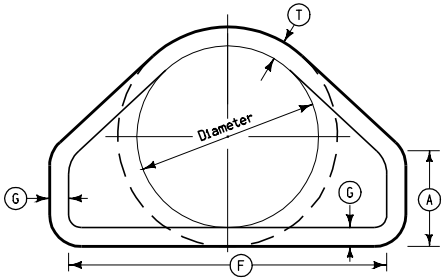

(TYPE 1 AND TYPE 2 APRONS)
END VIEW

Where 1500D pipe is used, the barrel portion of the apron shall meet or exceed the requirements for 1500D pipe. Where 2000D pipe is used, the barrel portion of the apron shall meet or exceed the requirements for 2000D pipe.

Reinforcement for the barrel portion of the apron shall be as shown on RF-1.

Dimension 'E' shown is minimum and shall be considered the design length. Any difference between the actual length of concrete apron installed and the length indicated hereon shall be appropriately adjusted for in the length of concrete culvert pipe furnished.

When specified in the contract documents, pipe apron guards shall be installed as shown on RF-26. Pipe apron guards will not be measured separately for payment, but shall be included in the contract unit price for "Concrete Aprons."

(1) Tongue end used on inlet end section. Groove end used on outlet end section. Dimensions for tongue and groove connections shall be as indicated on RF-1.

TYPE 1 APRONS

DIAM.	SLOPE	A	B	MINIMUM C	MINIMUM E	F	G	T
12	2.4:1	4″	2′-0″	4′- ″	6′- ″	2′-0″	2″	2″
15″	2.4:1	6″	2′-3″	3′-10″	6′-1″	2′-6″	2 ″	2 ″
18″	2.3:1	9″	2′-3″	3′-10″	6′-1″	3′-0″	2 ″	2 ″
21″	2.4:1	9″	3′-0 ″	3′-1 ″	6′-1 ″	3′-5″	3″	3″
24″	2.5:1	9 ″	3′-7 ″	2′-6″	6′-1 ″	4′-0″	3″	3″
27″	2.5:1	10 ″	4′-1 ″	2′-0″	6′-1 ″	4′-4″	3 ″	3 ″
30″	2.5:1	12″	4′-6″	1′-7 ″	6′-1 ″	5′-0″	3 ″	3 ″
36″	2.5:1	15″	5′-3″	2′-9″	8′-0″	6′-0″	4″	4″
42″	2.5:1	21″	5′-3″	2′-9″	8′-0″	6′-6″	4 ″	4 ″
48″	2.5:1	24″	6′-0″	2′-0″	8′-0″	7′-0″	5″	5″
54″	1.8:1	27″	5′-0″	3′-0″	8′-0″	7′-6″	5 ″	5 ″
60″	1.6:1	29 ″	5′-0″	3′-0″	8′-0″	8′-0″	5 ″	6″
66″	1.7:1	30″	6′-0″	2′-3″	8′-3″	8′-0″	5 ″	6″
72″	1.6:1	30″	6′-6″	1′-9″	8′-3″	9′-0″	6″	7″
78″	1.8:1	36″	7′-6″	1′-9″	9′-3″	9′-6″	6 ″	7 ″
84″	1.3:1	29 ″	6′-9″	2′-6 ″	9′-3 ″	10′-0″	6 ″	8″

TYPE 2 APRONS

DIAM.	SLOPE	A	B	MINIMUM C	MINIMUM E	F	G	T
12	2.4:1	4″	2′-0″	4′- ″	6′- ″	2′-0″	2″	2″
15″	2.4:1	6″	2′-3″	3′-10″	6′-1″	2′-6″	2 ″	2 ″
18″	2.3:1	9″	2′-3″	3′-10″	6′-1″	3′-0″	2 ″	2 ″
21″	2.4:1	9″	3′-0″	3′-1 ″	6′-1 ″	3′-5″	3″	3″
24″	2.5:1	9 ″	3′-7 ″	2′-6″	6′-1 ″	4′-0″	3″	3″
27″	2.5:1	10 ″	4′-1 ″	2′-0″	6′-1 ″	4′-4″	3 ″	3 ″
30″	2.5:1	12″	4′-6″	1′-7 ″	6′-1 ″	5′-0″	3 ″	3 ″
36″	2.5:1	15″	5′-3″	2′-9″	8′-0″	6′-0″	4″	4″
42″	2.5:1	21″	5′-3″	2′-9″	8′-0″	6′-6″	4 ″	4 ″
48″	2.5:1	24″	6′-0″	2′-0″	8′-0″	7′-0″	5″	5″
54″	1.9:1	24 ″	5′-5″	2′-7″	8′-0″	7′-6″	5 ″	5 ″
60″	1.4:1	24 ″	5′-0″	3′-0″	8′-0″	8′-0″	5 ″	6″
66″	1.7:1	30″	6′-0″	2′-3″	8′-3″	8′-0″	5 ″	6″
72″	1.4:1	24″	6′-6″	1′-9″	8′-3″	9′-0″	6″	7″
78″	1.8:1	36″	7′-6″	1′-9″	9′-3″	9′-6″	6 ″	7 ″
84″	1.5:1	23 ″	7′-6 ″	1′-9″	9′-3 ″	10′-0″	6 ″	8″

Contract Item:

Apron, Concrete

Tabulations:

104-3
104-5C

Iowa Department of Transportation

REVISION	
7	10-16-07

STANDARD ROAD PLAN

RF-3

SHEET 1 of 1

REVISIONS: Cleaned up notes and modified to show the tongue and groove end details.

Deanna Maifield
APPROVED BY DESIGN METHODS ENGINEER

CONCRETE APRONS